ENGINEERING
FABRICATING

INFRASTRUCTURE CONSULTING & ENGINEERING

SHOP DRAWING REVIEW

REVIEW IS FOR GENERAL COMPLIANCE WITH CONTRACT DOCUMENTS. NO RESPONSIBILITY IS ASSUMED FOR CORRECTNESS OF DIMENSIONS OR DETAILS.

APPROVED	☒
APPROVED AS NOTED	☐
REVISE AND RESUBMIT	☐
REJECTED	☐

BY: PLC DATE: 5/14/25

SOUTH CAROLINA LICENSED PROFESSIONAL ENGINEER
No. 38665
DAVID A LALLONE

May 9 2025

April 1, 2025

Archer-United Joint Venture
1021 Briargate Cir
Columbia, SC 29210

Attn: Eric Lockamy

Project:	P039718
County:	Lexington & Richland
Walpar Job No:	C3546
Subject:	OH-12 Upright Stub and Footing Review

Eric,

This letter summarizes the findings from the design review of structure OH-12, specifically addressing the right upright stub and shear condition Vcr < Vca for the approved and installed spread foundations. This review was based on a revised sign size of 48'-0 x 16'-6. Based on our findings, a 1'-0" stub is required for the right upright (86C2) to maintain a minimum clearance of 17'-6. The new clearance from the high point of the roadway to the bottom of the walkway is 17'-6¾".

The review of the installed spread foundations was conducted using data provided by the concrete testing agency, which included the lowest 28-day break compressive strength f ′c (psi) of the concrete used for the foundation installation. The review focused on determining the required f ′c to ensure Vcr > Vca and compared this required value to the actual f ′c values obtained.

28-Day Break Information provided:

- OH-12L = 4820 psi.
- OH-12R = 6570 psi.

OH-12L:

- The required f ′c for the installed foundation was 4150 psi, giving Vcr = 81 psi > Vca = 80 psi
- Based on the break f ′c = 4820 psi on the installed concrete gives additional capacity of 13.9% remaining beyond required.

OH-12R:

- The required f ′c for the installed foundation was 3000 psi, giving Vcr = 69 psi > Vca = 67 psi
- Based on the break f ′c = 6570 psi on the installed concrete gives additional capacity of 54.3% remaining beyond required.

Based on the findings from this review comparing the actual compressive strength f ′c to the required design strength f ′c, I believe that the structure would be acceptable as installed. I have included updated calculations that reflect the revised required f ′c design values.

Should you have any questions, please don't hesitate to contact me.

Sincerely,

David Lallone, PE

SCDOT
South Carolina Department of Transportation
ACCEPTED
☐ AS NOTED
REVIEWED BY: _____ DATE

Walpar, LLC
4200 Jefferson Ave., S.W. • P.O. BOX 28650 • Birmingham, Alabama 35228 • (205) 925-4990 • FAX (205) 925-7273
www.walpar.com

GENERAL NOTES

1. THE DESIGN/UPRIGHT POST HEIGHT IS FROM THE CENTER OF THE TRUSS/ARM TO THE BOTTOM OF THE BASE PLATE. THE GAP BETWEEN THE BOTTOM OF THE BASE PLATE AND THE TOP OF FOUNDATION IS NOT CONSIDERED IN THE HEIGHT CALCULATIONS. THIS REQUIRED GAP BETWEEN BASE AND FOUNDATION IS NOTED AS "BOLT DIAMETER PLUS 1" MAX" ON ALL DESIGN AND ERECTION DRAWINGS. NOTE THE AASHTO MAXIMUM LIMIT IS (2) BOLT DIAMETERS.
2. ANCHOR BOLTS – ROD = ASTM F1554, GRADE 55, S1
   – WASHERS = ASTM F436
   – NUTS = ASTM A563, GR DH OR A194, GR 2H
3. PIPE – STEEL = ALL PIPE SHALL MEET THE FOLLOWING SPECIFICATIONS WHICH COMPLY TO THE PROPERTIES OF 52 KSI MINIMUM YIELD, 60 KSI MINIMUM ULTIMATE TENSILE, MINIMUM ELONGATION EQUAL TO 20% IN 2 INCHES, AND YIELD STRENGTH NOT TO EXCEED 82 KSI WITHOUT APPROVAL OF THE ENGINEER; ASTM A500 GR B &/or C ASTM A53 GR A &/or B, ASTM A252 GR 2, or 3, & API 5L X42 through X80
   – ALUMINUM = 6061, T6
4. PLATE – STEEL, 3/16" OR GREATER = ASTM A709, GR 50
   – STEEL, 1/8" OR LESS = ASTM A1011, TYPE 1 MINIMUM
   – STEEL, GAUGE = ASTM A1011, TYPE 1 MINIMUM
5. BAR – STEEL = ASTM A36 MINIMUM
6. WIDE FLANGE – STEEL = ASTM A992
7. CHANNEL – STEEL = ASTM A36 MINIMUM
8. ANGLE – STEEL = ASTM A36 MINIMUM
   – ALUMINUM = 6061, T6
9. REBAR – STEEL = ASTM A706, GR 60 (RUNGS)
10. GRATING – STEEL, GRIP STRUT OR EQUAL = ASTM A1011, TYPE 1 MINIMUM
11. HARDWARE – BOLTS, PRIMARY = ASTM F3125 GR A325 (UN)
    – BOLTS, SECONDARY = ASTM A307
    – U-BOLTS = MEET OR EXCEED ASTM A307
    – WASHERS, FLAT = ASTM F436 (UN)
    – WASHERS, LOCK = ANSI B18.21.1 (UN)
    – WASHERS, DTI = F959
    – NUTS – ASTM A563, GR DH OR A194, GR 2H
12. GALVANIZING – STRUCTURAL = ASTM A123
    – HARDWARE = ASTM A153
    – ANCHOR ROD – GALV FULL LENGTH (UNO) = ASTM A153 (1)
13. POLE CAPS – ALUMINUM ALLOY SAND CASTING = 356-F
14. SADDLE SHIMS – ALUMINUM = 356-T6
15. WELDING – AWS SPEC D1.1, LATEST REV
16. ALL PIPE SIZES ARE OUTSIDE DIAMETER
17. ALL WELDS TO BE 3/16 FILLET UNLESS NOTED
18. WELDS INSPECTION NOTES ARE AS FOLLOWS:
    18.1 ALL WELDS SHALL BE VISUALLY INSPECTED (VT)
    18.2 FULL PENETRATION WELDS AT SHOP SPLICES WILL BE 100% (UT) TESTED FOR MATERIAL GREATER THAN OR EQUAL TO 0.25" AND (MT) LESS THAN 0.25"
    18.3 FULL PENETRATION WELDS AT BASE PLATES AND MAST ARMS END PLATES WITH 6" DIAMETER AND GREATER ARMS REQUIRE (UT) INSPECTION. IF THE SPECIFICATIONS CALLS FOR FATIGUE DESIGN MUST BE (UT) AFTER GALVANIZE FOR TOE CRACKS
    18.4 PARTIAL PENETRATION GROOVE AND FILLET WELDS AT TUBE TO BASE PLATE CONNECTIONS REQUIRE A RANDOM SAMPLE OF 25% OF THE STRUCTURES WITH (MT) OF FULL LENGTH OF WELD. (EX: JOB OF 2 DOUBLE-POLED UPRIGHTS WOULD CONSIST OF ONE POST OF ONE UPRIGHT WHEREAS ONE POST UPRIGHT WOULD REQUIRE FULL LENGTH OF WELD TESTED)

FOUNDATION NOTES

1. CONCRETE TO BE CLASS "3000" AND f'c=3000 PSI
2. REINFORCING TO BE ASTM – A706, GRADE 60, DEFORMED, Fy = 60 KSI, fs = 24 KSI
3. REINFORCING TO BE TIED SUFFICIENTLY TO RETAIN ITS PROPER SHAPE DURING PLACEMENT.
4. REINFORCING TO BE HOOKED OR BENT PER ACI CODE.
5. CONTRACTOR TO PROVIDE CONDUIT IN FOOTING AS NECESSARY FOR ELECTRICAL SERVICE.
6. SEE STRUCTURE ERECTION DRAWINGS FOR FOOTING ELEVATIONS & ANCHOR BOLT MARKS, QUANTITIES, & SPACING. ALL ANCHOR BOLTS ARE TO BE SET USING SUPPLIED ANCHOR TEMPLATES AND SOLE PLATES.
7. CONTRACTOR SHALL BACK FILL AS NECESSARY TO COVER FOUNDATION.
8. ALL BACK FILL MUST ACHIEVE 95% COMPACTION.
9. CONSTRUCTIONS JOINT ARE ALLOWED WITH FOLLOWING REQUIREMENTS, UNLESS NOTED ON FOUNDATIONS DRAWINGS
   9.1 FOR CYLINDRICAL FOOTINGS, C.J. MUST BE LOCATED AT A MINIMUM OF 4'-3 FROM THE TOP OF THE FOOTING TO ENSURE ANCHORS ARE LOCATED IN FINAL POUR. IF A GRADE BEAM IS USED, ALL BEAMS GREATER THAN THE MINIMUM CAN BE LOCATED AT BEAM TO CYLINDER JOINT UNLESS OTHERWISE NOTED ON THE FOUNDATION DRAWINGS.
   9.2 FOR SPREAD FOOTINGS, C.J. MUST BE LOCATED AT A MINIMUM OF 4'-3 FOR THE TOP OF FOOTING FOR ALL PEDESTALS GREATER THAN 4'-0. JOINTS ARE ALLOWED AT THE PEDESTAL TO PAD LOCATION.
   9.3 ALL CONSTRUCTION JOINT SURFACES MUST BE ROUGH AND CLEAR OF ANY LOOSE OR FOREIGN MATERIAL. PRIOR TO THE PLACEMENT OF FRESH CONCRETE, JOINT SURFACES MUST BE THOROUGHLY WETTED. (USE A BONDING AGENT IF REQ'D BY SPECIFICATIONS)
10. IT IS THE CONTRACTORS RESPONSIBILITY TO INSTALL FOUNDATIONS IN ACCORDANCE WITH SPECIFICATION AND PROPER CONSTRUCTION METHODS.
11. ON CYLINDRICAL FOOTING WHERE A SONOTUBE IS EITHER NOT AVAILABLE OR FEASIBLE, THE TOP PORTION OF THE CYLINDER CAN BE FORMED AS A SQUARE EQUAL TO THE DESIGNED CYLINDER DIAMETER. THE SQUARE FORM MUST START AT LEAST 6 INCHES BELOW GROUND ON THE LOWEST SIDE OF THE FOUNDATION.
12. ON CYLINDRICAL FOOTING WHERE A GRADE BEAM IS USED, THE STIRRUPS USED IN THE BEAM MAY BE SHIFTED TO CLEAR OTHER CYLINDRICAL REINFORCEMENT AND/OR ANCHOR BOLTS AS NECESSARY. NOTE: BE SURE TO MAINTAIN THE 12" MAXIMUM SPACING ON THE STIRRUPS BETWEEN THE (2) CYLINDERS AS SHOWN ON THE DRAWINGS.

INFRASTRUCTURE CONSULTING & ENGINEERING

SHOP DRAWING REVIEW

REVIEW IS FOR GENERAL COMPLIANCE WITH CONTRACT DOCUMENTS. NO RESPONSIBILITY IS ASSUMED FOR CORRECTNESS OF DIMENSIONS OR DETAILS.

APPROVED	[X]
APPROVED AS NOTED	[ ]
REVISE AND RESUBMIT	[ ]
REJECTED	[ ]

BY: PLC DATE: 5/14/25

ALL GROUPS

AASHTO 6th Edition Spec's

SEALED BY:

SOUTH CAROLINA PROFESSIONAL ENGINEER No. 35290 ROBERT R WIGINTON

Jan 30 2025

SOUTH CAROLINA PROFESSIONAL ENGINEER No. 38665 DAVID A LALLONE

Jan 30 2025

NO:	REVISIONS	DATE	MADE	CHECKED
1	REVISED TO ADD ANCHOR ROD GALV NOTE	1/30/25	---	JSD

walpar A valmont COMPANY

POST OFFICE BOX 28650
BIRMINGHAM ALABAMA 35228
4200 JEFFERSON AVENUE
BIRMINGHAM ALABAMA 35221
PHONE (205)-925-4990
FAX (205) 925-7273

1

STATE: South Carolina
FED PROJ: Carolina Crossroads Phase 1 & 2
ST PROJ: P039718
COUNTY: Lexington & Richland
ROUTE: I-26 & I-126

SUBJECT: GENERAL NOTES FOR PROJECT
WALPAR STANDARD DESIGN
FOR: Archer-United Joint Venture

DRAWN BY: IWL DATE: 7/19/23
CHECKED BY: DAL DATE: 8/21/23
DWG NO: C3546-G1

NAME: E:\acad\Djobs\SC\3546\3546-G1.dwg DATE: JAN 30, 2025 TIME: 11:57 AM jd706288

C3546-D15

STRUCTURE	STATION	SPAN	CHORDS	VERTICAL DIAGONAL	HORIZ DIAGONAL	STRUTS	CAMBER	ANCHOR BOLTS SIZE LT	ANCHOR BOLTS EMBED	ANCHOR BOLTS SIZE RT	ANCHOR BOLTS EMBED	LEFT UPRIGHT	RIGHT UPRIGHT	LEFT UPRIGHT DIAG & STRUT	RIGHT UPRIGHT DIAG & STRUT	SEAT	"A"	"B"	"C"	"D"	"E"	"F"	"G"	"H" LEFT	"H" RIGHT	CHORD SPLICE INFORMATION "J"	"K"	"L"	"M" LEFT	"M" RIGHT	"N" LEFT	"N" RIGHT	No OF SECTIONS	DESIGN SIGN AREA (ft²)	STUB SPLICE INFORMATION "T"	"U"	"V"	"W"	"X"
OH-12	414+73.64(EB)	89'-0	6.625 x .250	1.900 x .200	1.900 x .200	1.660 x .140	3	1½	3'-6	1¾	3'-6	12.750 x .250	14.000 x .250	3.500 x .188	3.500 x .188	LT-WT7x15 RT-WT6x13	23'-4½	34'-0¾	5'-6	1'-1½	3'-9	3'-3	⅝	1'-1½	1'-2	¼	1	6-1ø	1½	1¾	5/16	5/16	3	864.0	1'-0	1¾	4	1¾	1'-2
OH-22	3027+15.32(WB)	70'-0	4.500 x .188	1.660 x .140	1.660 x .140	1.315 x .133	2	1¼	3'-6	1¼	3'-6	8.625 x .188	8.625 x .188	2.375 x .154	2.375 x .154	WT6x13	27'-4½	28'-3½	4'-9	9	3'-9	3'-3	½	10½	10½	¼	¾	4-¾ø	1¼	1¼	5/16	5/16	2	313.0	2'-7	1¼	4	1¼	10½

△2

NOTE: ALL PIPE SIZES ARE OUTSIDE DIAMETER

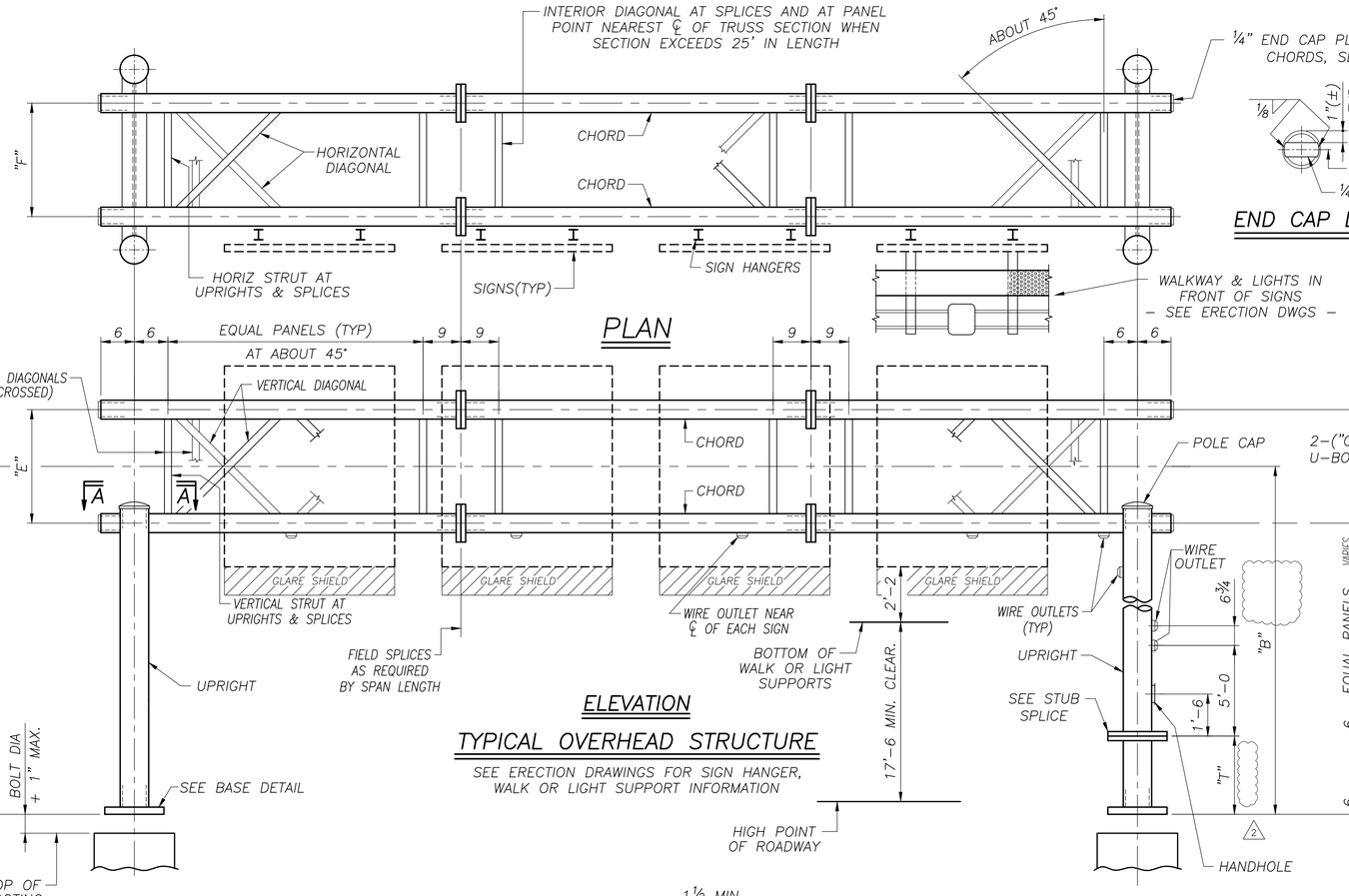

PLAN

ELEVATION

TYPICAL OVERHEAD STRUCTURE

SEE ERECTION DRAWINGS FOR SIGN HANGER, WALK OR LIGHT SUPPORT INFORMATION

END CAP DETAIL

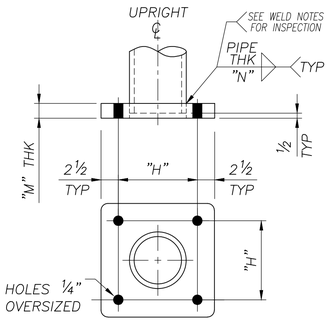

TYP BASE DETAIL

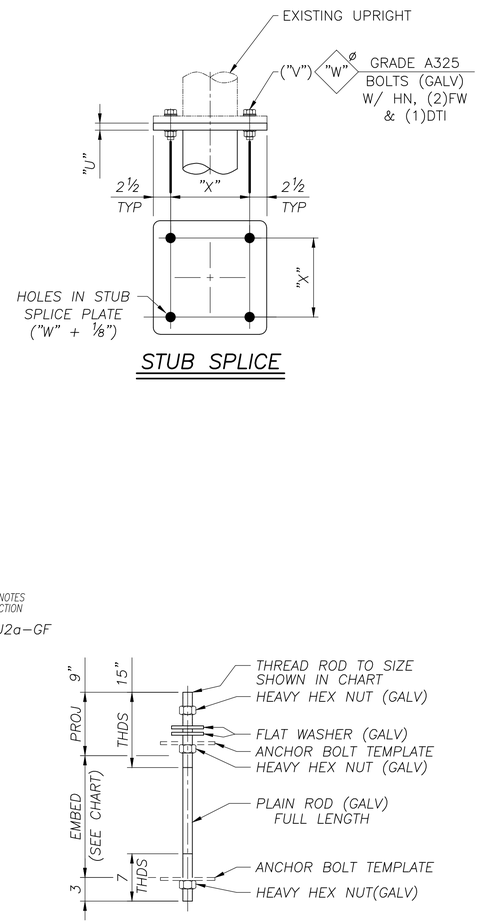

STUB SPLICE

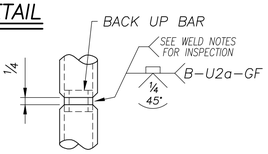

OPTIONAL SPLICE

(FOR WALL THK 5/16 OR GREATER ONLY)

ANCHOR DETAIL

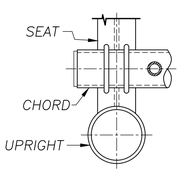

SECTION A-A

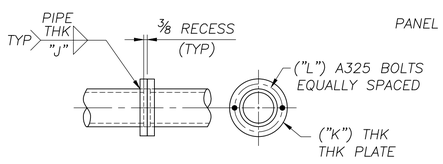

TYP SPLICE DETAIL

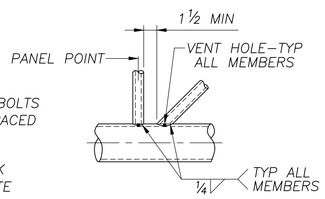

TYP DETAIL AT PANEL POINT

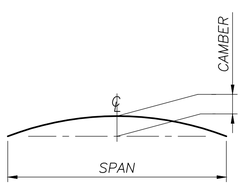

CAMBER DIAGRAM

NOTE:
SEE GENERAL NOTES DRAWING FOR MATERIAL SPECIFICATIONS, FOUNDATION AND STANDARD NOTES

GROUP 2

AASHTO 6th Edition Spec's

INFRASTRUCTURE CONSULTING & ENGINEERING

SHOP DRAWING REVIEW

REVIEW IS FOR GENERAL COMPLIANCE WITH CONTRACT DOCUMENTS. NO RESPONSIBILITY IS ASSUMED FOR CORRECTNESS OF DIMENSIONS OR DETAILS.

APPROVED	[X]
APPROVED AS NOTED	[ ]
REVISE AND RESUBMIT	[ ]
REJECTED	[ ]

BY: PLC DATE: 5/14/25

SEALED BY:

SOUTH CAROLINA PROFESSIONAL ENGINEER No. 38665 DAVID A LALLONE

May 9 2025

NO:	REVISIONS	DATE	MADE	CHECKED
2	REVISED OH-12 FOR TO ADDED RT UPRIGHT STUB	4/1/25	---	MAH

walpar
A valmont COMPANY
POST OFFICE BOX 28650
BIRMINGHAM ALABAMA 35228
4200 JEFFERSON AVENUE
BIRMINGHAM ALABAMA 35221
PHONE (205)-925-4990
FAX (205) 925-7273

△2

STATE:	South Carolina
FED PROJ:	Carolina Crossroads Phase 1 & 2
ST PROJ:	P039718
COUNTY:	Lexington & Richland
ROUTE:	I-26 & I-126
SUBJECT:	OVERHEAD SIGN SUPPORT DESIGN
	WALPAR STD BOX TRUSS DESIGN
FOR:	Archer-United Joint Venture
DRAWN BY:	IWL DATE: 8/24/23
CHECKED BY:	RRW DATE: 9/14/23
DWG NO:	C3546-D15

BTDPD-D

STRUCTURE	STATION	CONC/FTG (yds[3])	REINF/FTG (lbs)	"A"	"B"	"C"	"D"	"E"	"F"	"G"	"H"	"J"	"K"	"L"	"M"	"N"	"P"	"R"	"S"	"T"	"U"	"V"	"W"	"X"	"Z"	"ZZ"
OH–12(L)	414+73.64(EB)	18.29	2299	22'–0	11'–0	5'–6	7'–9	1'–1½	7'–1½	2'–3	4'–4½	7'–6	1'–6	9'–0	32	12	8	4	8	22	5	11	9	1'–0	5'–8¼	6'–0
			2											2							2		2			

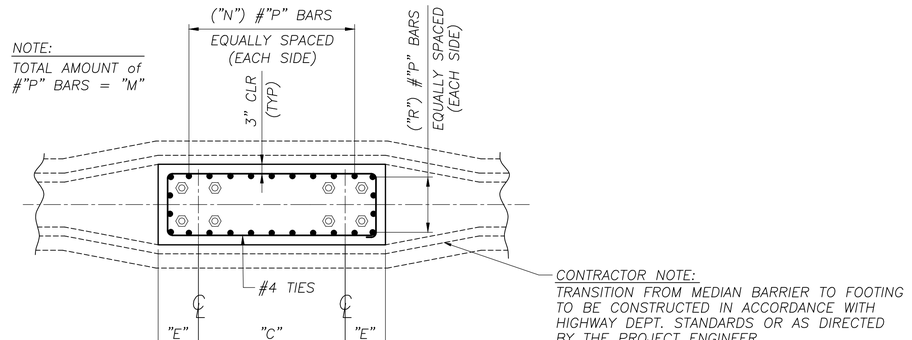

CONTRACTOR NOTE:
TRANSITION FROM MEDIAN BARRIER TO FOOTING TO BE CONSTRUCTED IN ACCORDANCE WITH HIGHWAY DEPT. STANDARDS OR AS DIRECTED BY THE PROJECT ENGINEER.

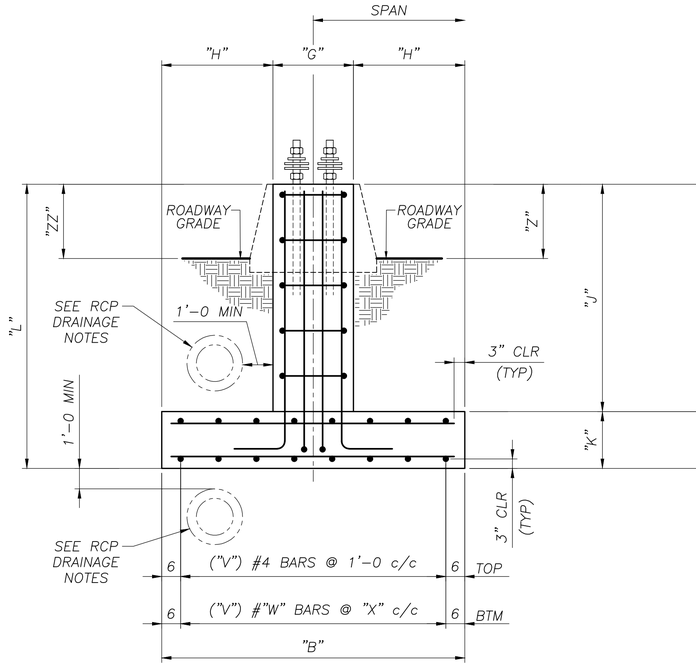

END VIEW
(LOOKING IN DIRECTION OF TRAFFIC)

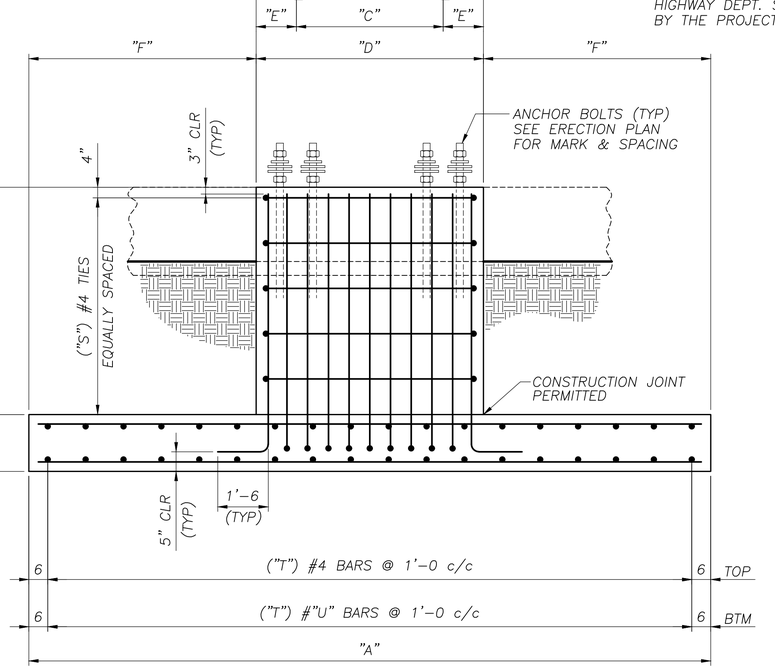

SIDE VIEW
(PARALLEL TO ROADWAY)

RCP DRAINAGE NOTE:

ANY ENCOUNTERS WITH RCP DRAINAGE PIPES DURING THE INSTALLATION OF A FOUNDATION SHOULD BE ROUTED AROUND THE PEDESTAL AS SHOWN IN END VIEW IF LOCATED ABOVE PAD OF FOOTING. IF THE RCP PIPE IS LOCATED BELOW PAD OF THE FOUNDATION, RCP PIPE MUST HAVE A MINIMUM OF 1'–0 PACKED COVER.

NOTE:

SEE GENERAL NOTES DRAWING FOR MATERIAL SPECIFICATIONS, FOUNDATION AND STANDARD NOTES

GROUP 2

AASHTO 6th Edition Spec's

INFRASTRUCTURE CONSULTING & ENGINEERING

SHOP DRAWING REVIEW

REVIEW IS FOR GENERAL COMPLIANCE WITH CONTRACT DOCUMENTS. NO RESPONSIBILITY IS ASSUMED FOR CORRECTNESS OF DIMENSIONS OR DETAILS.

APPROVED [X]
APPROVED AS NOTED [ ]
REVISE AND RESUBMIT [ ]
REJECTED [ ]

BY: PLC DATE: 5/14/25

SEALED BY:

SOUTH CAROLINA PROFESSIONAL ENGINEER
No. 38665
DAVID A LALLONE

May 9 2025

walpar
A valmont COMPANY
POST OFFICE BOX 28650
BIRMINGHAM ALABAMA 35228
4200 JEFFERSON AVENUE
BIRMINGHAM ALABAMA 35221
PHONE (205)–925–4990
FAX (205) 925–7273

STATE:	South Carolina
FED PROJ:	Carolina Crossroads Phase 1 & 2
ST PROJ:	P039718
COUNTY:	Lexington & Richland
ROUTE:	I–26 & I–126
SUBJECT:	OVERHEAD SIGN SUPPORT MEDIAN SPREAD FOOTING DRAWING
FOR:	Archer–United Joint Venture
DRAWN BY:	IWL DATE: 8/24/23
CHECKED BY:	RRW DATE: 9/14/23
DWG NO:	C3546–D19

NO:	REVISIONS	DATE	MADE	CHECKED
2	REVISED FOR PROVIDED CONRETE BREAK	4/1/25	---	MAH

STRUCTURE	STATION	CONC/FTG (yds[3])	REINF/FTG (lbs)	"A"	"B"	"C"	"D"	"E"	"F"	"G"	"H"	"J"	"K"	"L"	"M"	"N"	"P"	"R"	"S"	"T"	"U"	"V"	"W"	"X"	"Z"
OH–12(R)	414+73.64(EB)	15.80	1791	21'–0	11'–0	5'–6	8'–0	1'–3	6'–6	2'–6	4'–3	4'–0	1'–6	5'–6	40	15	8	5	5	21	4	11	8	1'–0	1'–0
OH–20(L)	5418+54.43(EB)	18.80	2150	23'–0	12'–0	5'–9	8'–6	1'–4½	7'–3	2'–9	4'–7½	4'–0	1'–6	5'–6	44	16	8	6	5	23	5	12	8	1'–0	9"
OH–20(R)	5418+54.43(EB)	19.89	2485	24'–0	12'–0	5'–9	8'–9	1'–6	7'–7½	3'–0	4'–6	4'–0	1'–6	5'–6	48	18	8	6	5	24	5	12	9	1'–0	9"
OH–22(L)	3027+15.32(WB)	9.17	951	15'–0	8'–0	4'–9	6'–9	1'–0	4'–1½	2'–0	3'–0	5'–0	1'–6	6'–6	28	10	8	4	6	15	4	8	5	1'–0	1'–3
OH–22(R)	3027+15.32(WB)	8.33	906	15'–0	7'–0	4'–9	6'–9	1'–0	4'–1½	2'–0	2'–6	5'–0	1'–6	6'–6	28	10	8	4	6	15	4	7	5	1'–0	1'–3

△2

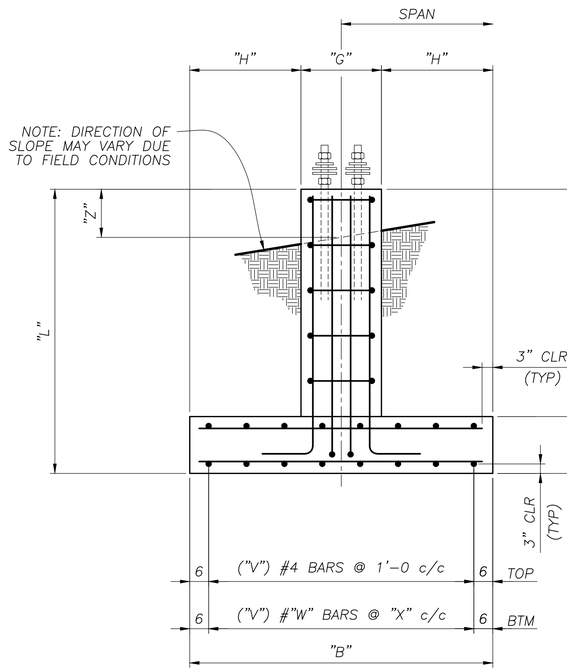

END VIEW

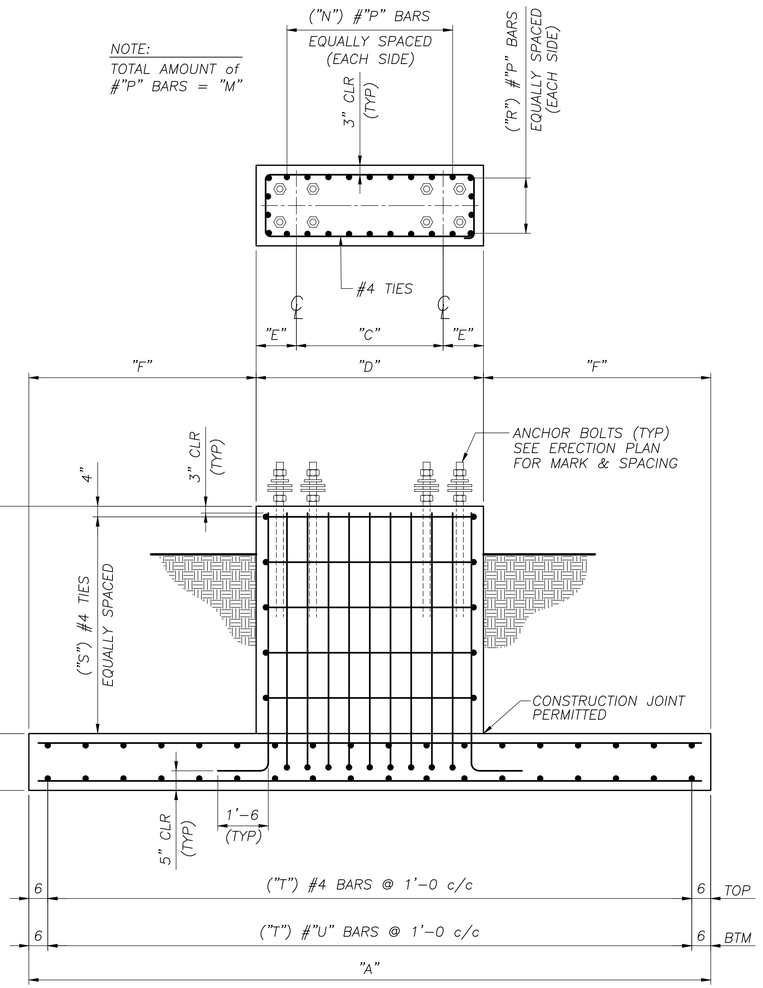

SIDE VIEW

(PARALLEL TO ROADWAY)

NOTE:
TOTAL AMOUNT of #"P" BARS = "M"

NOTE:
SEE GENERAL NOTES DRAWING FOR MATERIAL SPECIFICATIONS, FOUNDATION AND STANDARD NOTES

INFRASTRUCTURE CONSULTING & ENGINEERING

SHOP DRAWING REVIEW

REVIEW IS FOR GENERAL COMPLIANCE WITH CONTRACT DOCUMENTS. NO RESPONSIBILITY IS ASSUMED FOR CORRECTNESS OF DIMENSIONS OR DETAILS.

APPROVED ☒
APPROVED AS NOTED ☐
REVISE AND RESUBMIT ☐
REJECTED ☐

BY: PLC DATE: 5/14/25

GROUP 2

AASHTO 6th Edition Spec's

SEALED BY:

SOUTH CAROLINA PROFESSIONAL ENGINEER
No. 38665
DAVID A LALLONE

May 9 2025

walpar
A valmont COMPANY
POST OFFICE BOX 28650
BIRMINGHAM ALABAMA 35228
4200 JEFFERSON AVENUE
BIRMINGHAM ALABAMA 35221
PHONE (205)–925–4990
FAX (205) 925–7273

△2

STATE:	South Carolina
FED PROJ:	Carolina Crossroads Phase 1 & 2
ST PROJ:	P039718
COUNTY:	Lexington & Richland
ROUTE:	I–26 & I–126
SUBJECT:	OVERHEAD SIGN SUPPORT SPREAD FOOTING DRAWING
FOR:	Archer–United Joint Venture
DRAWN BY:	IWL DATE: 8/24/23
CHECKED BY:	RRW DATE: 9/14/23
DWG NO:	C3546–D20

NO:	REVISIONS	DATE	MADE	CHECKED
△2	REVISED OH–12 FOR NEW DSA & UPRIGHT STUB	4/1/25	---	MAH

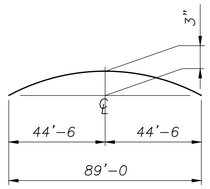

CAMBER DIAGRAM

(PERMANENT CAMBER = 1¾")

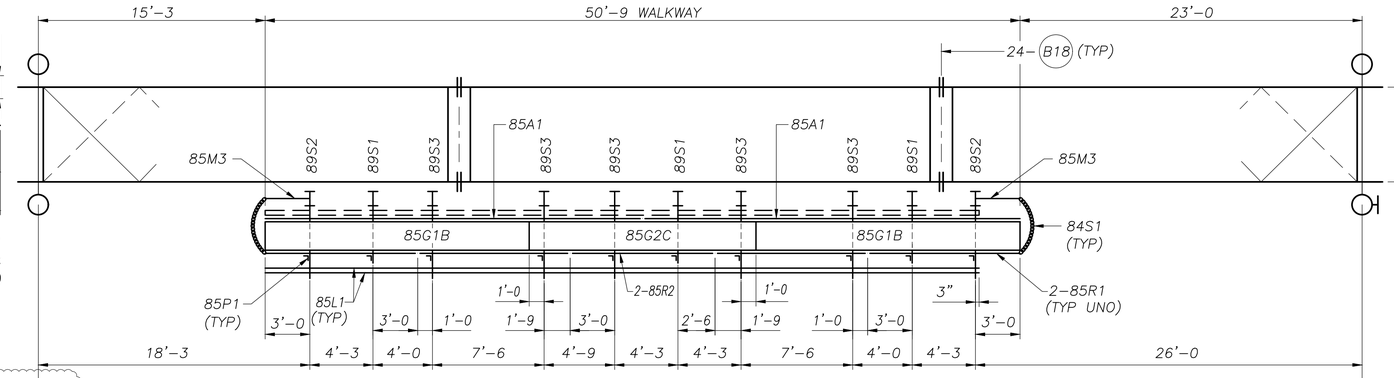

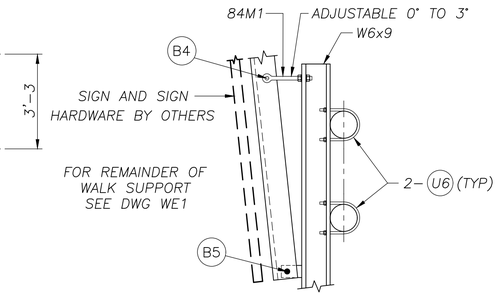

TYP SECTION THRU SIGN SUPPORT & SIGN HANGER

NOTE: EXIT PANELS & SUPPORTS BY OTHERS

IF REQUIRED, FIELD CUT 1'-0 OFF TOP OF ALL EXISTING 89H1 HANGERS TO ALIGN WITH SHORTENED SIGN HEIGHT. REPAIR GALVANIZING PER ASTM A780.

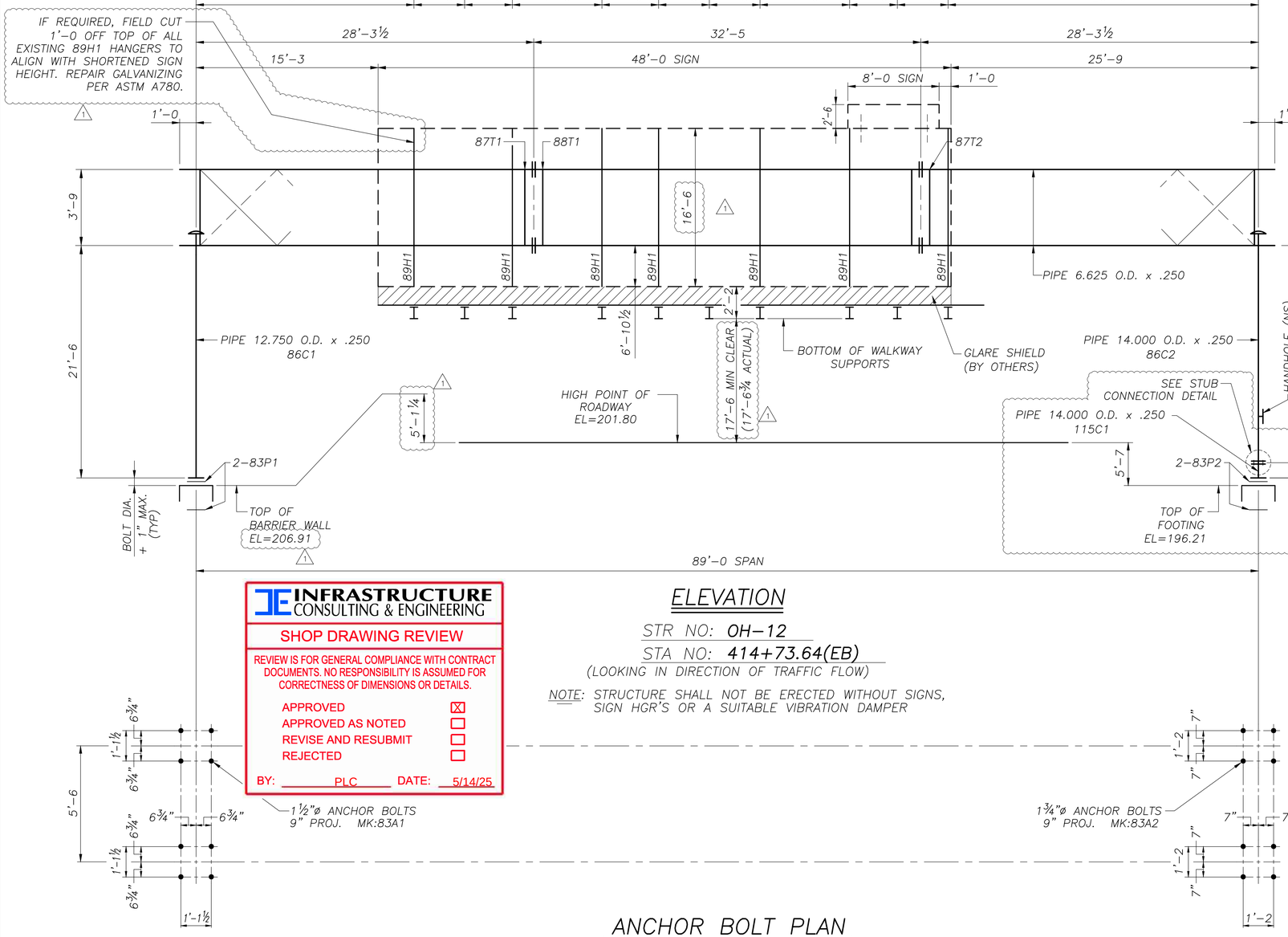

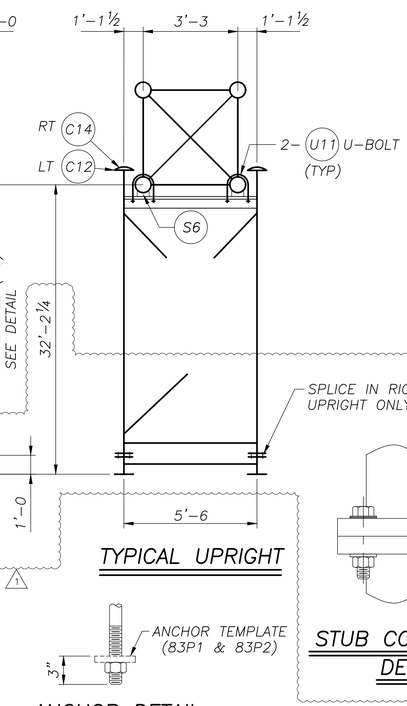

TYPICAL UPRIGHT

ANCHOR DETAIL

(TYPICAL)

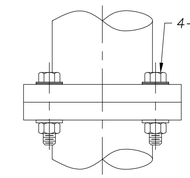

STUB CONNECTION DETAIL

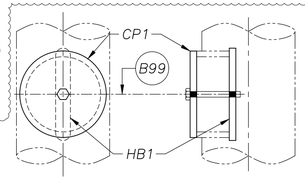

HANDHOLE DETAIL

PRE ASSEMBLE CP1 TO HB1 WITH B99 BOLT. DISTURB THREADS SO HB1 CAN NOT BE REMOVED. INSTALL COVER ASSEMBLY INTO HANDHOLE OPENING AND TIGHTEN BOLT TO SECURE.

ELEVATION

STR NO: OH-12

STA NO: 414+73.64(EB)

(LOOKING IN DIRECTION OF TRAFFIC FLOW)

NOTE: STRUCTURE SHALL NOT BE ERECTED WITHOUT SIGNS, SIGN HGR'S OR A SUITABLE VIBRATION DAMPER

ANCHOR BOLT PLAN

INFRASTRUCTURE CONSULTING & ENGINEERING

SHOP DRAWING REVIEW

REVIEW IS FOR GENERAL COMPLIANCE WITH CONTRACT DOCUMENTS. NO RESPONSIBILITY IS ASSUMED FOR CORRECTNESS OF DIMENSIONS OR DETAILS.

APPROVED	☒
APPROVED AS NOTED	☐
REVISE AND RESUBMIT	☐
REJECTED	☐

BY: PLC DATE: 5/14/25

NOTE:

SEE GENERAL NOTES DRAWING FOR MATERIAL SPECIFICATIONS, FOUNDATION AND STANDARD NOTES

DESIGN DWGS: D15, D17-D20 DESIGN NO: BT7 AASHTO 6th Edition Spec's

OH-12

SEALED BY:

SOUTH CAROLINA PROFESSIONAL ENGINEER DAVID A LALLONDE No. 38665

May 9 2025

NO:	REVISIONS	DATE	MADE	CHECKED
1	REVISIONS DUE TO ELEV CHANGE, UPRIGHT STUB ADDED, SIGN HEIGHT CHANGED	5/2/25	DLK	JSD

walpar A valmont COMPANY

POST OFFICE BOX 28650
BIRMINGHAM ALABAMA 35228
4200 JEFFERSON AVENUE
BIRMINGHAM ALABAMA 35221
PHONE (205)-925-4990
FAX (205) 925-7273

STATE:	South Carolina
FED PROJ:	Carolina Crossroads Phase 1 & 2
ST PROJ:	P039718
COUNTY:	Lexington & Richland
ROUTE:	I-26 & I-126
SUBJECT:	OVERHEAD BOX TRUSS STRUCTURE ERECTION DRAWING
FOR:	Archer-United Joint Venture
DRAWN BY:	DLK DATE: 10/3/23
CHECKED BY:	DLJ DATE: 10/16/23
DWG NO:	C3546-E13

BT-E

PREVIOUSLY SHIPPED

SHIPPING LIST — C3546-E13

QTY	MARK	DESCRIPTION
8	83A1	ANCHOR BOLTS
8	83A2	ANCHOR BOLTS
4	83P1	ANCHOR TEMPLATES
4	83P2	ANCHOR TEMPLATES
1	87T1	BOX TRUSS 4.3' x 4.8' x 29.4'
1	88T1	BOX TRUSS 4.3' x 4.8' x 32.5'
1	87T2	BOX TRUSS 4.3' x 4.8' x 29.4'
1	86C1	UPRIGHT 7' x 1.5' x 21.6'
1	86C2	UPRIGHT 7.1' x 1.6' x 31.3'
3	89S1	WALK SUPPORT
2	85M3	SAFETY CHAIN SUPPORT
2	84S1	SAFETY CHAIN
10	84P1	HINGE PIN ASSEMBLIES
20	85M1	CLAMP PLATES
4	85M2	SPLICE PLATES
10	85P1	HANDRAIL POSTS
8	85R1	HANDRAILS
2	85R2	HANDRAILS
2	85A1	SAFETY ANGLES
2	85G1B	GRATING
1	85G2C	GRATING
2	89S2	SIGN/WALK/LIGHT SUPPORTS
5	89S3	SIGN/WALK/LIGHT SUPPORT
7	89H1	SIGN HANGERS (ANGLE ARM)
7	84M1	EYEBOLT ASSEMBLIES
4	85L1	LIGHT SUPPORTS
1	CP1	COVER PLATE ASSEMBLY
1	HB1	HANDHOLE BAR
54	B1	3/8" x 1 1/4" BOLT w/HN/LW (A307 GALV)
20	B3	1 3/8" OD x 14 GA WASHER (A307 GALV)
7	B4	3/4" x 2 1/2" HHB w/HN/FW/LW (A325 GALV)
7	B5	3/4" x 2" HHB w/HN/LW (A325 GALV)
10	B6	1/2" x 1 1/2" HHB w/HN/LW (A325 GALV)
48	B18	1" x 3 3/4" HHB w/HN/FW/DTI (A325 GALV)
1	B99	1/4" x 4" HHB (A307 GALV)
2	C12	POLE CAPS #291 w/ (2) 1/2" SET SCRS(S.S.)
2	C14	POLE CAPS #283 w/ (2) 1/2" SET SCRS(S.S.)
4	S6	SADDLE SHIMS #360
20	U1	5/16" U-Bolts w/(2 ea) HN/LW (ZINC PL)
40	U6	1/2" U-Bolts w/(2 ea) HN/LW/FW (GALV)
8	U11	5/8" U-Bolts w/(2 ea) HN/LW/FW (GALV)
1	115C1	UPRIGHT STUB 7.1' x 1.6' x 1.0'
8	B119	1 3/4" x 6 1/2" HHB w/(1)HN/(2)FW/(1)DTI (A325 GALV)

NAME: E:\acad\JobsNProg\3546\3546-E13.dwg DATE: MAY 02, 2025 TIME: 2:08 PM jd706288

C3546–115

PARTS PER CONT	PART MARK NO	NO. OF PIECES REQ'D	SECTION SYM	DESCRIPTION OF MATERIAL	LENGTH FEET	LENGTH INCHES	PARTS FOR ONE UNIT	
	115C1	1		UPRIGHT STUB				
	a	2	PIPE	14.000 x .250	0	11		
	b	1	PIPE	3.500 x .188	4	4 3/8		
	d	2	PL	1 3/4 x 19	1	7		
	f	2	PL	1 3/4 x 19	1	7		

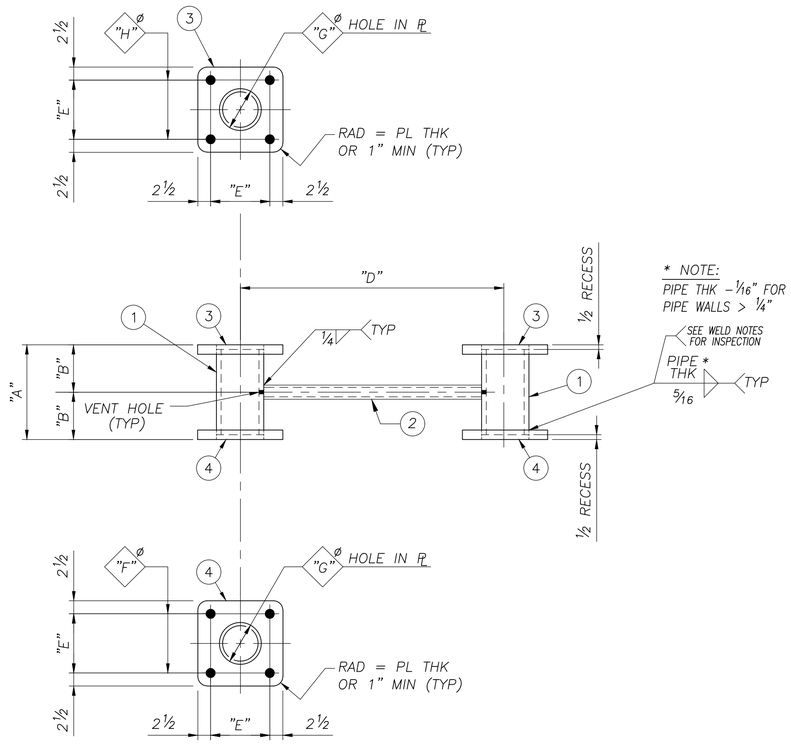

VENT HOLE SIZES	
WEB MEMBER (O.D.)	HOLE DIA. ± 1/4"
< 3.500	3/4
3.500	1 3/4
4.000	2
4.500	2 1/4
5.563	2 3/4
6.625	3 1/4

UPRIGHT STUB

MARK	QTY	"A"	"B"		"D"	"E"	"F"	"G"	"H"	1	2	3	4
115C1	1	1'–0	6		5'–6	1'–2	2	1'–2 1/16	1 7/8	a	b	d	f

INFRASTRUCTURE CONSULTING & ENGINEERING

SHOP DRAWING REVIEW

REVIEW IS FOR GENERAL COMPLIANCE WITH CONTRACT DOCUMENTS. NO RESPONSIBILITY IS ASSUMED FOR CORRECTNESS OF DIMENSIONS OR DETAILS.

APPROVED [X]
APPROVED AS NOTED [ ]
REVISE AND RESUBMIT [ ]
REJECTED [ ]

BY: PLC DATE: 5/14/25

NOTE:
SEE GENERAL NOTES DRAWING FOR MATERIAL SPECIFICATIONS AND STANDARD NOTES

OH–12

REF DWG: E13

AASHTO 6th Edition Spec's

SEALED BY:

SOUTH CAROLINA PROFESSIONAL ENGINEER DAVID A LALLONE No. 38665

May 9 2025

walpar
A valmont COMPANY
POST OFFICE BOX 28650
BIRMINGHAM ALABAMA 35228
4200 JEFFERSON AVENUE
BIRMINGHAM ALABAMA 35221
PHONE (205)–925–4990
FAX (205) 925–7273

STATE:	South Carolina
FED PROJ:	Carolina Crossroads Phase 1 & 2
ST PROJ:	P039718
COUNTY:	Lexington & Richland
ROUTE:	I–26 & I–126

SUBJECT: OVERHEAD SIGN SUPPORT
DETAIL OF UPRIGHT STUB

FOR: Archer–United Joint Venture

DRAWN BY: DLK DATE: 4/24/25
CHECKED BY: JSD DATE: 5/2/25

DWG NO: C3546–115

NO:	REVISIONS	DATE	MADE	CHECKED
0	CHECK COMPLETE	5/2/25	DLK	JSD

SH–DET1

NAME: E:\acad\JobsNProg\3546\3546–115.dwg DATE: MAY 02, 2025 TIME: 2:13 PM ja706288

State :	South Carolina	Wind Velocity (mph) :	100
Federal Proj :	Carolina Crossroads Phase 1 & 2	Ice Load Area :	Yes
State Proj :	P039718		
County :	Lexington & Richland		
Route :	I-26 & I-126		

Reference:

6th Edition of Standard Specifications for Structural Supports for Highway Signs, Luminaires and Traffic Signals, as published by the American Association of State Highway and Transportation Officials, dated 2013. (Includes all Interims)

Index:

F1B			Cover sheet
F2B			Material Specifications & Foundation Design Assumptions
F3B	-	F7B	Truss Design format
F8B	-	F9B	Post Design format
F10B	-	F11B	Anchor Bolt and Base Plate Design format
F12B			Truss Connection to Upright Design format
F13B			Deflection and Camber format
F14B	-	F15B	Member Selection format
F16B			Truss Splice Design format
F17B			Vibration and Fatigue design format
F18B	-	F25B	Foundation Design (Spread and Cylindrical)

These design format sheets prefixed with "F" are furnished to illustrate basic formulas used by our design program. Work these format sheets with Box Truss Double Pole Design information sheet(s) prefixed with "BT" followed by design computation printouts. Step by step calculations are not supplied nor required. Results of the calculations presented are those produced from standard steel design calculations or the results of issues in fabrication. The approver may verify these results using any method they deem suitable, resulting increase in material requirements will be considered but may increase cost to the owner if deemed excessive. Walpar Engineers have attested that these designs and drawings meet the required specifications for the project stated above by sealing and signing the documents.

SOUTH CAROLINA LICENSED PROFESSIONAL ENGINEER
No. 38665
DAVID A LALLONE

Sep 8 2023

Material Specifications: (See General Notes drawing for complete list & for items not shown)

Hardware ----------	Primary	ASTM F3125 Gr A325
	Secondary	ASTM A307
Wide Flange Sections ----------		ASTM A992 (50 ksi)
Plates ----------		ASTM A709 Gr 50 (50 ksi)
Angles ----------		ASTM A36
Anchor Bolts ----------		ASTM F1554, Gr 55, S1
Anchor Nuts ----------		ASTM A563, Gr DH or A194 Gr 2H
Galvanizing ----------	Hardware	ASTM A153
	Structural	ASTM A123
Welding ----------		AWS Specifications D1.1, Latest Revision
Chords ----------Steel Pipe		ASTM A500 Gr B and/or C, ASTM A252 Gr 1, 2, or 3, ASTM A53 Gr A and/or B, and API 5L X42 through X80 (52 ksi Min. Yield and not to exceed 82 ksi)
Posts ----------Steel Pipe		
Struts & Diagonals ----------Steel Pipe		

Foundation Design Assumptions:

1. See printouts for maximum soil bearing capacity and passive pressure.
2. Wind gust factors are included in loadings.
3. Allowables increased by 33% for Group II loadings.
4. Concrete f 'c = 3000 psi
5. Reinforcing steel to be ASTM – A706, Grade 60, Fy = 60 KSI.
6. For double pole uprights, assume 25% overturning moment will be taken by second cylinder, therefore design cylinder for 75% of moment.
7. Design cylindrical footings as piles with lateral loads. Overturning moments and lateral soil forces are critical. Therefore, use plastic hinge approach for soil resistance and maximum moment in piles (Rutledge, Seiler, Broms method).

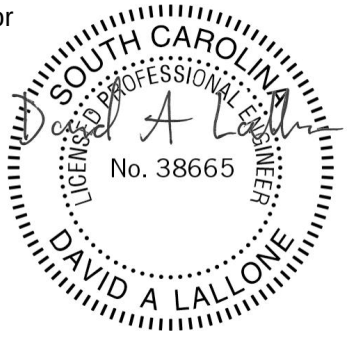

Sep 8 2023

Wind Load

$P = 0.00256\,(K_z)(G)(V^2)(I_r)(C_d)$ Eq. 3.8.3-1, page 3-5 (P min = 25 psf, for Group III only)

Alternate Method for Wind Pressure (Appendix C) (If required)

* $P = 0.00256\,(1.3*V)^2\,(C_d)\,(C_h)$ Eq (C.3-1 psf), page C-1)

Where
- V = Wind Velocity (MPH)
- C_d = Wind Drag Coefficient from Table 3.8.6-1, pg's 3-17, 3-18, 3-19
- K_z = Coefficient of Height from Table 3.8.4-1, pg 3-13
- C_h = Coefficient of Height from Table C.3-1, pg C-2
- G = Gust Effect Factor (minimum of 1.14)
- I_r = Wind Importance Factor = 1.00 for 50 year interval

Wind on Sign (C_d = see Table 3.8.6-1)

$W_p = (D_i)(B_i)(P_s)$
- P_s = wind on sign in PSF
- D_i = Sign Height (ft)
- B_i = Sign Length (ft)

Wind on Truss (C_d = 1.2)

$W_h = (A_t)(B_i)(P_t)$
- P_t = Wind on Truss in PSF
- A_t = Exposed area of truss per foot

$$= 2(\text{Chord OD}) + 1.414(\text{Vert Diag OD}) + \frac{\sum(\text{Vert Strut OD})(\text{Vert Strut Lgth})}{\text{Truss Length}}$$

- B_i = Exposed truss length (ft)

Support reactions due to wind

$WH_i = W_h + W_p$

$Rh_L = \frac{1}{L}\left[\sum_{i=1}^{n}(WH_i)(a_i)\right]$ (L = Span length: a_i = distance to centroid of section "i")

$Rh_R = \frac{1}{L}\left[\sum_{i=1}^{n}(WH_i)(L-a_i)\right]$ $Rh_{max.}$ = Greater of Rh_L or Rh_R

Point of zero shear

From right support $Am_h = Rh_R - \sum_{i=1}^{m} WH_i \le 0$

Moment due to wind

$M_h = Rh_L(L - Am_h) - \sum_{i=m+1}^{n} WH_i(a_i - Am_h)$

SOUTH CAROLINA LICENSED PROFESSIONAL ENGINEER No. 38665 DAVID A LALLONE

Sep 8 2023

Dead Load

Kv_i = 0 when struts are not used
Kv_i = 1 when struts are used
Hw = Estimated weight of signs and hangers = 7 psf, unless otherwise specified, see printouts
Ww = Estimated weight of walkway, if required, is calculated based on width of walkway and any specified railing, lights and safety angle and is calculated by the program based on spacing of supports. See printouts for estimated weight

W_d = Weight per foot of truss

$$= 4(\text{Chord Wgt}) + 2(\text{Vert Diag Lgth})(\text{Vert Diag Wgt}) + 2(\text{Horz Diag Lgth})(\text{Horz Diag Wgt}) \ldots + \frac{\sum(\text{Horz Strut Wgt})(\text{Horz Strut Lgth}) + (\text{Vert Strut Wgt})(\text{Vert Strut Lgth})}{\text{Truss Length}}$$

DL_i =Dead load acting at section "i"

$= (W_d)\,(b_i) + (Hw)\,(b_i)\,(d_i)\,(K_i) + (Ww)\,(b_i)\,(Kw_i)$

where,
Kw_i = 0 where walkway not required
Kw_i = 1 where walkway required
K_i = 0 where sign not required
K_i = 1 where sign required

Support reactions due to dead load

$$Rd_L = \frac{1}{L}\left[\sum_{i=1}^{n}(DL_i)(a_i)\right]$$

(L = Span length: a_i = distance to centroid of section "i")

$$Rd_R = \frac{1}{L}\left[\sum_{i=1}^{n}(DL_i)(L - a_i)\right]$$

$Rd_{max.}$ = Greater of Rd_L or Rd_R

Point of zero shear

From right support $Am_d = Rd_R - \sum_{i=1}^{m} DL_i \le 0$

Moment due to dead load

$$M_d = Rd_L(L - Am_d) - \sum_{i=m+1}^{n} DL_i(a_i - Am_d)$$

SOUTH CAROLINA LICENSED PROFESSIONAL ENGINEER
No. 38665
DAVID A LALLONE

Sep 8 2023

Ice Load

$Kw_i = 1$ if walkway is included, else $Kw_i = 0$
3 PSF applied to one face of sign and around surface of structural members. (See Fig 3.7-1, pg 3-4 for areas)
Assume ice on walkway = 21 lbs per lineal foot

Wi_i = Ice load for segment i

$$Wi_i = 3(b_i)\left[(d_i)(k_i) + \left(\frac{4\pi(\text{Chord OD}) + 2\pi(\text{Vert Diag OD})(1.414) + 2\pi(\text{Horiz Diag OD})(1.414) + \pi\sum(\text{Horiz Strut OD})(\text{Horiz Strut Lgth}) + (\text{Vert Strut OD})(\text{Vert Strut Lgth})}{\text{Truss Length}}\right) + 7(Kw_i)\right]$$

Support reactions due to ice load

$$Ri_L = \frac{1}{L}\left[\sum_{i=1}^{n}(Wi_i)(a_i)\right]$$

(L = Span length: a_i = distance to centroid of section "i")

$$Ri_R = \frac{1}{L}\left[\sum_{i=1}^{n}(Wi_i)(L - a_i)\right]$$

Ri_{max} = Greater of Ri_L or Ri_R

Point of zero shear

From right support $Am_i = Ri_R - \sum_{i=1}^{m} Wi_i \leq 0$

Moment due to ice load

$$M_i = Ri_L(L - Am_i) - \sum_{i=m+1}^{n} Wi_i(a_i - Am_i)$$

SOUTH CAROLINA LICENSED PROFESSIONAL ENGINEER
No. 38665
DAVID A LALLONE

Sep 8 2023

Group I (DL)

Chord Load (If $Kv_i = 0$, L = 2 * U; if $Kv_i = 1$, L = U) (U = truss depth: L = panel length)

$$Pc_I = \frac{Md}{2U}$$

Diagonals (vertical) L = 1.414 * U

$$Pv_I = 1414\left(\frac{Rd_{max}}{2}\right)$$

Struts (vertical) L = U

$$Ps_I = \frac{Rd_{max.}}{2}$$

Group II (DL + W)

Chord Load (If $Kv_i = 0$, L = 2 * U; if $Kv_i = 1$, L = U)

$$Pc_{II} = \frac{Md}{2*U} + \frac{Mh}{2*Y}$$ Y = Truss Width

Moment on front chord due to wind on sign near mid-span

$$Mc_{II} = \frac{(0.0052\,V^2)}{4}(A)(L)$$

A = sign area applied to one chord

$$A = \frac{(\text{Max Hgr Spc})(\text{Max Sign Ht})}{2}$$

L = 2 * U (no struts)
L = U (struts at each panel)

Diagonals (vertical) L = 1.414 * U

$Pv_{II} = Pv_I$

Diagonals (horizontal) $L = \sqrt{U^2 + Y^2}$

$$Pi_{II} = \frac{Rh_{max.}(L)}{2Y}$$

Struts (vertical) L = U

$Ps_{II} = Kv_i\,(Ps_I)$

Struts (horizontal) L = Y

$$Psh_{II} = Kv_i\left[\frac{(Rh_{max.})}{2}\right]$$



Sep 8 2023

Group III (DL + W/2 + IL)

Chord Load (If $Kv_i = 0$, L = 2 * U; if $Kv_i = 1$, L = U)

$$Pc_{III} = \frac{Md + Mi}{2 * U} + \frac{0.5\ Mh}{2 * Y}$$

Moment on front chord due to wind on sign near mid-span

$Mc_{III} = 0.5\ Mc_{II}$

Diagonals (vertical) L = 1.414 * U

$$Pv_{III} = 1.414\ \frac{[Rd_{max} + Ri_{max}]}{2}$$

Diagonals (horizontal) $L = \sqrt{U^2 + Y^2}$

$$Pi_{III} = \frac{(0.5)(Rh_{max})(L)}{2 * Y}$$

Struts (vertical) L = U

$$Ps_{III} = Kv_i\left(\frac{Rd_{max} + Ri_{max}}{2}\right)$$

Struts (horizontal) L = Y

$$Psh_{III} = Kv_i\ \frac{(Rh_{max.})}{4}$$

Determine:

Chords	- using Pc_I, Pc_{II}, Mc_{II}, Pc_{III}, Mc_{III}
Vertical diagonals	- using Pv_I, Pv_{II}, Pv_{III}
Horizontal diagonals	- using Pi_{II}, Pi_{III}
Vertical struts	- using Ps_I, Ps_{II}, Ps_{III}
Horizontal struts	- using Psh_{II}, Psh_{III}

SOUTH CAROLINA LICENSED PROFESSIONAL ENGINEER
No. 38665
DAVID A LALLONE

Sep 8 2023

Post Design Group I not critical, check Group II & III

W_v = Wind on Post = $(\frac{\text{Post OD}}{12})(H)(0.00256)(K_z)(G)(V^2)(I_r)(C_d)$

R_v = Weight of Post = $(H)\left[2(\text{Post Wgt/Ft}) + 1.414(\text{Diag Wgt/Ft}) + \frac{2 * Yu}{H}(\text{Strut Wgt/Ft})\right] + 400$ *

Yu = Y+ Chord OD + Post OD + 4" min. Note: Assume diagonals near 45°

* Indicates misc. (Base PL, Cap PL, etc...)

Group II (DL + W)

Combination 1

$$P_{IIA} = \frac{Rh_{max}(H) + Wv\left(\frac{H}{2}\right)}{Yu} + \frac{Rd + Rv}{2}$$

$$V_{IIA} = \frac{Rh_{max} + Wv}{2}$$

$$M_{IIA} = \frac{0.2\left[\frac{\sum WH_i}{2}(H) + W_v\left(\frac{H}{2}\right)\right]}{2}$$

Combination 2

$$P_{IIB} = \frac{0.6\left[Rh_{max}(H) + Wv\left(\frac{H}{2}\right)\right]}{Yu} + \frac{Rd + Rv}{2}$$

$V_{IIB} = 0.6\ (V_{IIA}) + 0.3\ (V_{IIA})$

$$M_{IIB} = \frac{0.3\left[\frac{\sum WH_i}{2}(H) + W_v\left(\frac{H}{2}\right)\right]}{2}$$

$P_{diag} = 2\ (V_{II})\ (1.414)$

$P_{str} = 2\ (V_{II})$

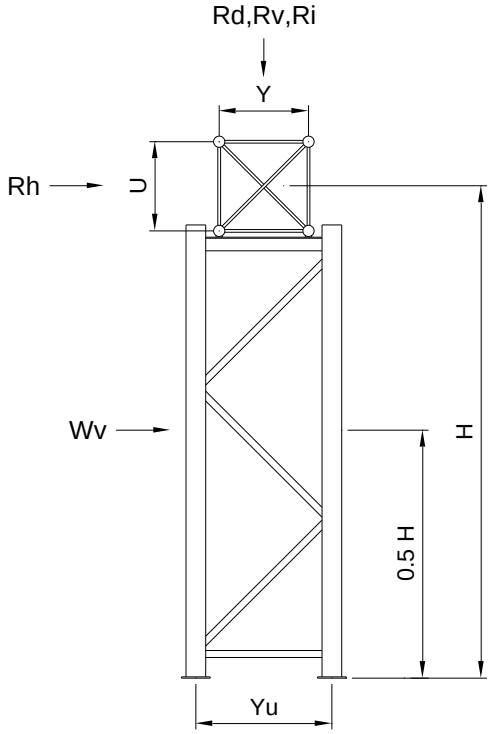

Group III (DL + 0.5W + IL) Loads per post

Combination 1

$$P_{IIIA} = \frac{0.5\left[Rh_{max}(H) + Wv\left(\frac{H}{2}\right)\right]}{Yu} + \frac{Rd + Rv + Ri}{2}$$

$V_{IIIA} = ½V_{IIA}$

$$M_{IIIA} = \frac{0.2\left[\frac{(0.5)\sum WH_i}{2}(H) + (0.5)W_v\left(\frac{H}{2}\right)\right]}{2}$$

Note

For upright, $\ell = H - \frac{U}{2}$

For diagonal, $\ell = 1414Yu$

For strut, $\ell = Yu$

SOUTH CAROLINA LICENSED PROFESSIONAL ENGINEER
No. 38665
DAVID A LALLONE

Sep 8 2023

Combination 2

$$P_{IIIB} = \frac{0.6\left[(0.5)Rh_{max}(H)+(0.5)Wv\left(\frac{H}{2}\right)\right]}{Yu} - \frac{Rd+Rv+Ri}{2}$$

$$V_{IIIB} = 0.6\ (0.50 * V_{IIA}) + 0.3\ (0.50 * V_{IIA})$$

$$M_{IIIB} = \frac{0.3\left[\frac{(0.5)\sum WH_i}{2}(H)+(0.5)W_v\left(\frac{H}{2}\right)\right]}{2}$$

$P_{diag} = 2\ (V_{III})\ (1.414)$

$P_{str} = 2\ (V_{III})$

Determine:

Upright	- using V, P, & M from Comb. 1 & 2 for each group
Diagonals	- using P_{diag} for each applicable group
Struts	- using P_{str} for each applicable group

SOUTH CAROLINA
LICENSED PROFESSIONAL ENGINEER
No. 38665
DAVID A LALLONE

Sep 8 2023

Anchor Bolt Design

Use loadings from Group II, (Maximum by inspection). See sheet F2B for material specifications.

Total shear per anchor bolt

Worst case if normal and transverse shear loads are combined.

$$V_{AB} = \frac{V_{IIB}}{4}$$

Total axial load per anchor bolt

$$P_{AB} = \frac{0.6\left[Rh_{max}(H) + Wv\left(\frac{H}{2}\right)\right]}{4\,(Yu)} + \frac{M_{IIB}}{(0.707)(BC) * \left(\frac{No\ Ab}{2}\right)} - \frac{Rd_{max} + Rv}{8} \qquad \text{where, } BC = \frac{OD + 6"\pm}{12}$$

Allowable Stresses

$F_v = 0.30\ F_y\,(j)$ (Eq 5.17.4.2-3) $F_t = 0.50\ F_y\,(j)$ (Eq 5.17.4.2-1)

Determine anchor thread diameter

$A_t = \frac{P_{AB}}{F_t}$ A_t = Actual tensile stress area required per bolt

A_{tt} = Tensile stress area for trial size bolt ($A_{tt} > A_t$)

Check for combined loading

$(f_v)^2 + (kf_t)^2 \le (F_v)^2$ $k = \frac{F_v}{F_t}$ $fv = \frac{V_{AB}}{A_{tt}}$ $ft = \frac{P_{AB}}{A_{tt}}$

Anchor bolt embedment length

Embedment length to be the greater of the development length for a non-contact lap splice if the anchor bolt is within 6" of the vertical reinforcement of the pedestal / cylinder or 20 anchor bolt diameters. Alternately the anchor bolt embedment will meet or exceed the requirements of Appendix D of ACI-318-08. All anchors bolts will have a nut at the bottom and be 55 ksi bolts unless otherwise specified. Note hooked anchor bolts only used if specified or required by job specifications.

SOUTH CAROLINA LICENSED PROFESSIONAL ENGINEER
No. 38665
DAVID A LALLONE

Sep 8 2023

Base Plate Design

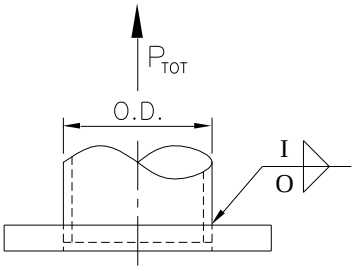

Below is the standard base plate design that will be used unless otherwise specified or indicated on design printouts and/or drawings.

Use ASTM A709, Grade 50 Plate (F_y=50,000 PSI)

Assume point of contraflexure midway between bolt and toe of weld.

$$e = \frac{1.414C - (OD - 2\,(0.313))}{4}$$

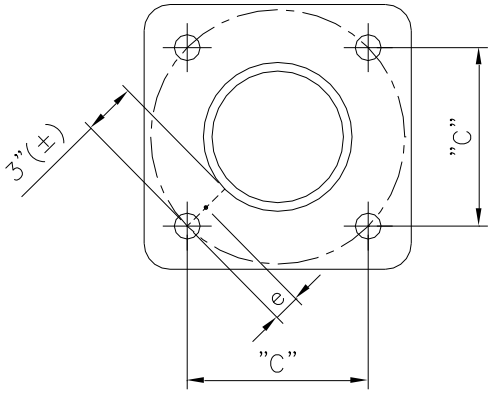

Allowable Stresses

Plate: Fb = 0.75 F_y (j) (Eq. 5.8-1)

Weld: Fv = 21.00 (j) AWS-2008 Table 2.3
page 25 - Ft_w = 70 ksi

Determine Plate Thickness

$M = (P_{AB})(e)$

$S = M/F_b$

$t = \sqrt{6\,S}$ (Base Plate thickness the greater of (t) or anchor bolt diameter)

Determine Weld

Design for P_{TOT} + Max Moment + Shear Load (for each post)

$$P_w = \sqrt{\left(\frac{P_{TOT}}{\pi(\text{pipe OD})} + \frac{M_{max\ res}}{\pi\left(\frac{\text{pipe OD}}{2}\right)^2} + \right)^2 + \left(\frac{V_{max\ res}}{\pi(\text{pipe OD})}\right)^2}$$

Inside weld capacity = I_v; $I_v = \pi(\text{Pipe OD})(\text{Max Weld Size})(0.707)(Fv)(j)$

Outside weld O_w; $O_w = \dfrac{Pw - I_v}{\pi(\text{Pipe OD})(0.707)(F_v)(j)}$ use $\frac{5}{16}$" minimum weld

Note:

Base plate width in both directions shall not be less than Bolt Circle.

Alternate Base Plate

If the required base plate exceeds 3" in thickness, the use of stiffeners extended beyond critical bending section will be used and the plate thickness re-sized, unless not allowed per project specifications. Use weld on stiffeners in addition to weld I and weld O to develop base connection.

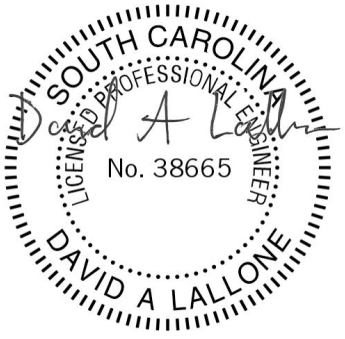

Sep 8 2023

Truss Connection to Upright

Check Group II and Group III loadings and use maximum.

Vertical load due to wind, $P = \frac{Rh_{max}(U)}{2Y}$

Load on truss seat, $P_{UB} = P + \frac{Rd_{max}}{2}$; $M_{truss\ seat} = P_{UB} * a$

Truss seat

Use WT6x13, WT7x15, WT8x18, W8x24, W8x31, or W10x45 as required.

Fb = (0.6 Fy)(1.33)

Weld Fv = 21000 psi (AWS-2008 Table 2.3 page 25 - Ft_w = 70000 psi minimum)

U-Bolts at chords (A307 U-bolts used unless otherwise specified, see drawings for actual)

Allowable shear stress, Fv = 11000 psi (AASHTO Table 10.32.3A)

Area of U-bolt required for tension, $At = \frac{P - \frac{Rd_{max}}{2}}{4(Fv)(j)}$, $f_t = \frac{P - \frac{Rd_{max}}{2}}{4(At)}$

Area of U-bolt required for shear, $Av = \frac{Rh_{max}}{8(Fv)(j)}$, $f_v = \frac{Rh_{max}}{8(At)}$ $k = \frac{Fv}{Ft}$

Check for combined stresses

$Fv^2 \geq (f_v)^2 + (kf_t)^2$

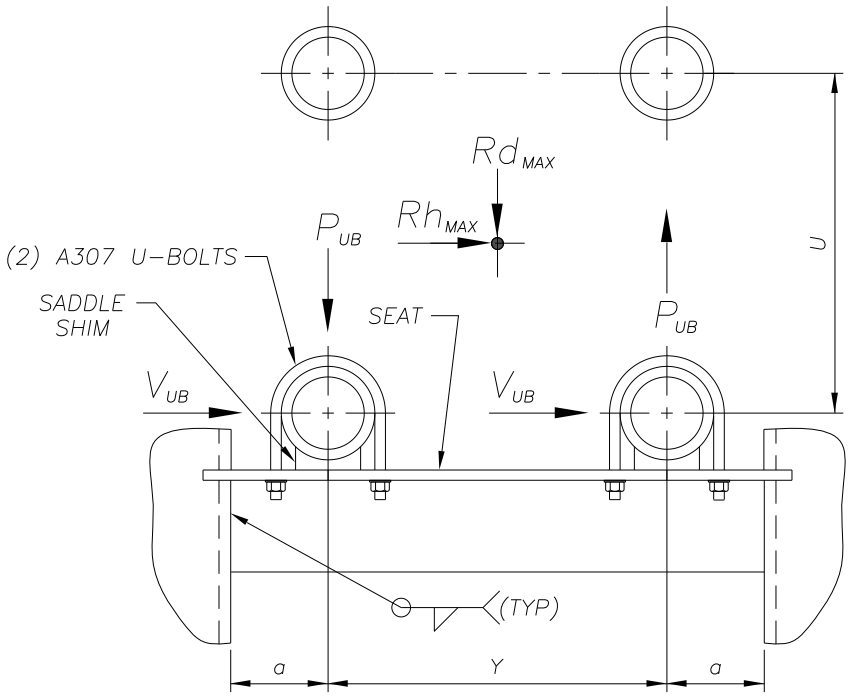

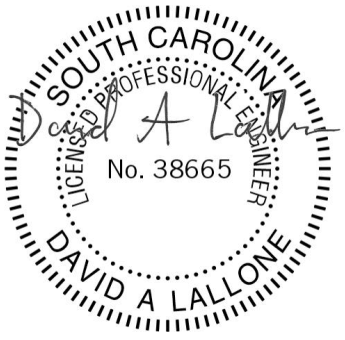

Sep 8 2023

Dead Load Deflection and Camber

Nomenclature

S = span
A = chord area
I_o = chord moment of inertia
U = truss depth
I = truss moment of inertia
C = camber
E = modulus of elasticity
Wd_i = load at any point
A_i = distance to load point
D = depth of deepest sign
ΔDL = truss dead load deflection

Truss deflection due to dead load

$$\Delta DL = \frac{1728\left[\sum_{i=1}^{M} WD_i\, A_i\,(3S^2 - 4A_i^2) + \sum_{i=M+1}^{N} WD_i\,(S - A_i)\{3L^2 - 4(S - A_i)^2\}\right]}{48EI}$$

Truss moment of inertia

$$I = 4\,(I_o) + 4\,(A)\left(\frac{U}{2}\right)^2$$

Limit for deflection

Deflection due to dead load and ice load shall be limited to

$$\Delta DL_{max} = \frac{L}{150}$$

Camber Used

$C_u = \frac{L - 50'}{5'}(0.25) + 1''$ (1" minimum), Then the number is rounded to the nearest 1/16 of an inch.

Permanent camber remaining

Minimum per AASHTO = L/1000 + DL deflection

No maximum used unless specified by job provisions

$C_p = C_u - \Delta DL$

SOUTH CAROLINA
LICENSED PROFESSIONAL ENGINEER
No. 38665
DAVID A LALLONE

Sep 8 2023

Member selection - Steel Pipe

Increase in allowable unit stresses from Table 3.4-1.

j = 1.33 for Group II and Group III
j = 1.0 for Group I
k = 1.0 for truss chords and web members, 1.0 for uprights

Allowable unit stresses

Bending: (In terms of radius)

compact - Fb = 0.66 Fy (j); if $\left[\frac{Fy}{E}\left(\frac{R}{t}\right)\right] \le 0.063$

non-compact - $Fb = \left[0.39 + 0.017\frac{E}{Fy}\left(\frac{t}{R}\right)\right](Fy)(j)$; $if\ 0.063 < \frac{Fy}{E}\left(\frac{R}{t}\right) < 0.13$

non-compact - $Fb = \left[0.39 + 0.017\frac{E}{Fy}\left(\frac{t}{R}\right)\right](Fy)(j)$; $if\ 0.13 < \frac{Fy}{E}\left(\frac{R}{t}\right)$

Shear: (Section 5.11.1 – round) (Based on radius of pipe)

Fv = 0.33 Fy (j) ; when $\left(\frac{Fy}{E}\right)\left(\frac{R}{t}\right)^{\frac{3}{2}} \le 0.44$

$Fv = 0.145\ E\left(\frac{t}{R}\right)^{\frac{3}{2}}$; when $\left(\frac{Fy}{E}\right)\left(\frac{R}{t}\right)^{\frac{3}{2}} > 0.44$

Axial compression: (Section 5.10)

$Fa = \left[\frac{0.52\pi^2 E}{\left(kl/r\right)^2}\right](j)$; if $\frac{kl}{r} > C_c$, where $Cc = \sqrt{\frac{2\pi^2 E}{Fy}}$

$$Fa = \left\{\frac{\left[1 - \frac{\left(kl/r\right)^2}{2C_c^2}\right]Fy}{\frac{5}{3} + \frac{3\left(kl/r\right)}{8C_c} - \frac{\left(kl/r\right)^3}{8C_c^3}}\right\}(j)\ ;\ \text{if}\ \frac{kl}{r} < C_c$$

Actual stresses

$fa = \frac{P}{A}$ A = area of trial member

$fb = \frac{M}{S}$ S = section modulus of trial member

$fv = \frac{V}{A}$

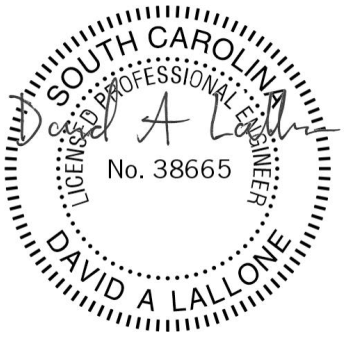

Sep 8 2023

Member selection - Steel Pipe (cont.)

Check for combined stresses. Below are the default CSR limits used unless noted in provisions.

For intermediate points of trusses and uprights $CSR \le 1.0$ (Eq. 5.12.2.1-2)

$$CSR = \frac{fa}{Fa} + \frac{fb}{\left(1 - \frac{fa}{F'_e}\right)Fb} + \left(\frac{fv}{Fv}\right)^2 \quad \text{, where } F'_e = \frac{12\pi^2 E}{23\left(kl/r\right)^2}$$

Trusses are checked for maximum axial load at the point of zero shear and maximum local moment due to load from hanger.

Uprights are checked for (loads) and lengths in panels of uprights where maximum conditions are located as illustrated below.

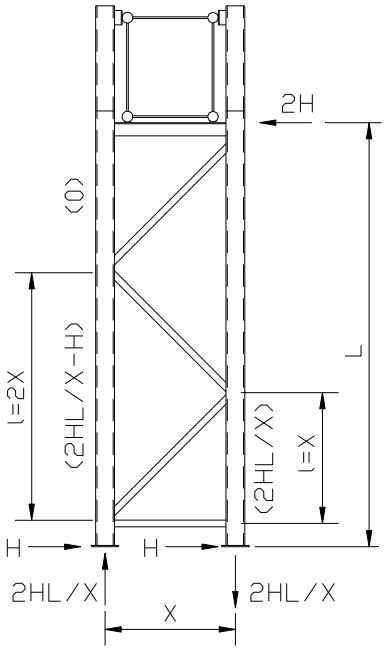

For end points of trusses and base of uprights $CSR \le 1.0$ (Eq. 5.12.2.1-1)

$$CSR = \frac{fa}{0.6Fy} + \frac{fb}{Fb} + \left(\frac{fv}{Fv}\right)^2$$

Trusses do not exhibit maximum conditions at ends for these types of structure therefore use previous equation.

Compare base CSR calculated here with CSR at intermediate points and use the maximum.

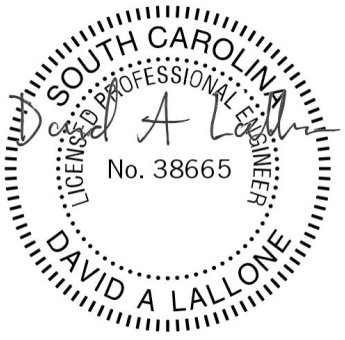

Sep 8 2023

Truss Splice Design (if required)

Below is the standard truss splice design that will be used unless otherwise specified or indicated on design printouts and/or drawings.

Design for the average of the maximum chord load and the strength of the member but not less than 75% of the strength of the member. (AASHTO 10.18.1)

Assume point of contraflexure midway between the bolt and toe of weld.
Use A709 Grade 50 Plate (Fy = 50000 psi)
Use ¼" minimum outside weld
Use A325 bolts (Ft = 38000 psi) (AASHTO Table 10.32.3B)
Bolt circle = OD + 3" (±)

Loads

$$P_{TOT} = \frac{\text{Max Chord "Pc"} + (A)(Fy_c)}{2} \quad \text{or} \quad (0.75)(A)(Fy_c), \text{ whichever is greater}$$

$$P = \frac{P_{TOT}}{\pi(OD)} \text{ kips / linear inch of circumference} \qquad e = \frac{BC - (OD + \frac{1}{2})}{4}$$

M = P * e kips / linear inch of circumference

Allowable Stresses

Plate - Fb = 0.750 (Fy) (j)
Weld - Fv = 21.60 (j)
Pipe - Ft = 0.660 (Fy) (j)

Determine bolts

$f_t = Ft(A_t)(j)$; A_t = tensile stress area

$$\text{No Req'd} = \frac{P_{TOT}}{f_t}$$

Determine plate thickness

$$S = \frac{M}{Fb} \text{ in}^3 \text{ / linear inch of circumference}$$

$$t = \sqrt{\frac{6\,S}{b}} \quad b = 1\text{" of circumference}$$

Determine weld

Iv = value of weld $I = \pi(OD)(\text{Pipe Thk})(0.707)(Fv)$

$$\text{Size of weld O} = \frac{P_{TOT} - Iv}{\pi(OD)(0.707)(Fv)} \quad ; \quad ¼\text{" minimum}$$

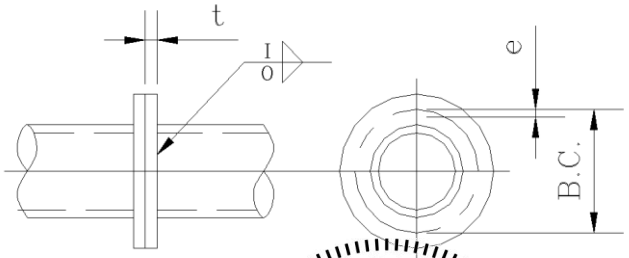



Sep 8 2023

Vibration and Fatigue Design

Overhead sign structure's shall be designed for fatigue to resist each of the applicable equivalent static wind load effects specified in Article 11.7, and modified by fatigue importance factors in Article 11.6, Table 11.6-1 page 11-5 of the specifications which states the structures should be checked for fatigue due to natural wind and truck induced wind gusts.

Because Vibration and Fatigue is subject to ongoing research by AASHTO / NCHRP, values shown in design may be based on most current AASHTO specification.

Natural Wind Gust

Each overhead structure will be designed to resist a static natural wind gust pressure range of 5.2 (C_d) (I_f) according to Article 11.7.1.2. The pressure is applied to the horizontal surface of the sign and structure.

Truck Induced Wind Gust

Each overhead structure shall be designed to resist the equivalent static truck wind gust pressure. The pressure range for truck-induced gust shall be 18.8 (C_d) (I_f) and adjusted for magnitude according to Article 11.7.1.3. The pressure is applied in the vertical direction to the horizontal surfaces of the sign, walkway, and truss. The pressure range shall be applied along any (12-ft) length to create maximum stress range, excluding any portion not directly over traffic lanes.

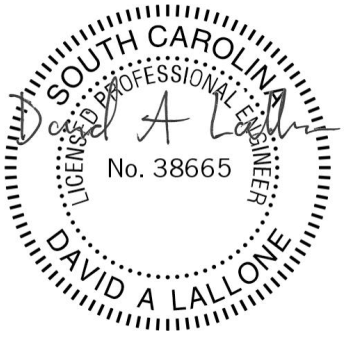

Sep 8 2023

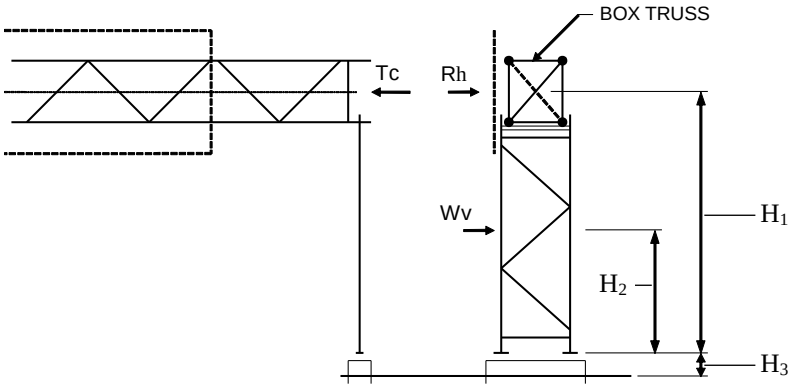

Tc = Transverse component of wind = 0.2(Rh + Wv)
Rh = Wind on sign and truss
Wv = Wind on upright
DL = Dead load = (Rd + Rv)

NOTE: Loads in kips & dimensions in feet

SOUTH CAROLINA
LICENSED PROFESSIONAL ENGINEER
No. 38665
DAVID A LALLONE

Sep 8 2023

CALCULATION OF FOOTING CORNER STRESSES

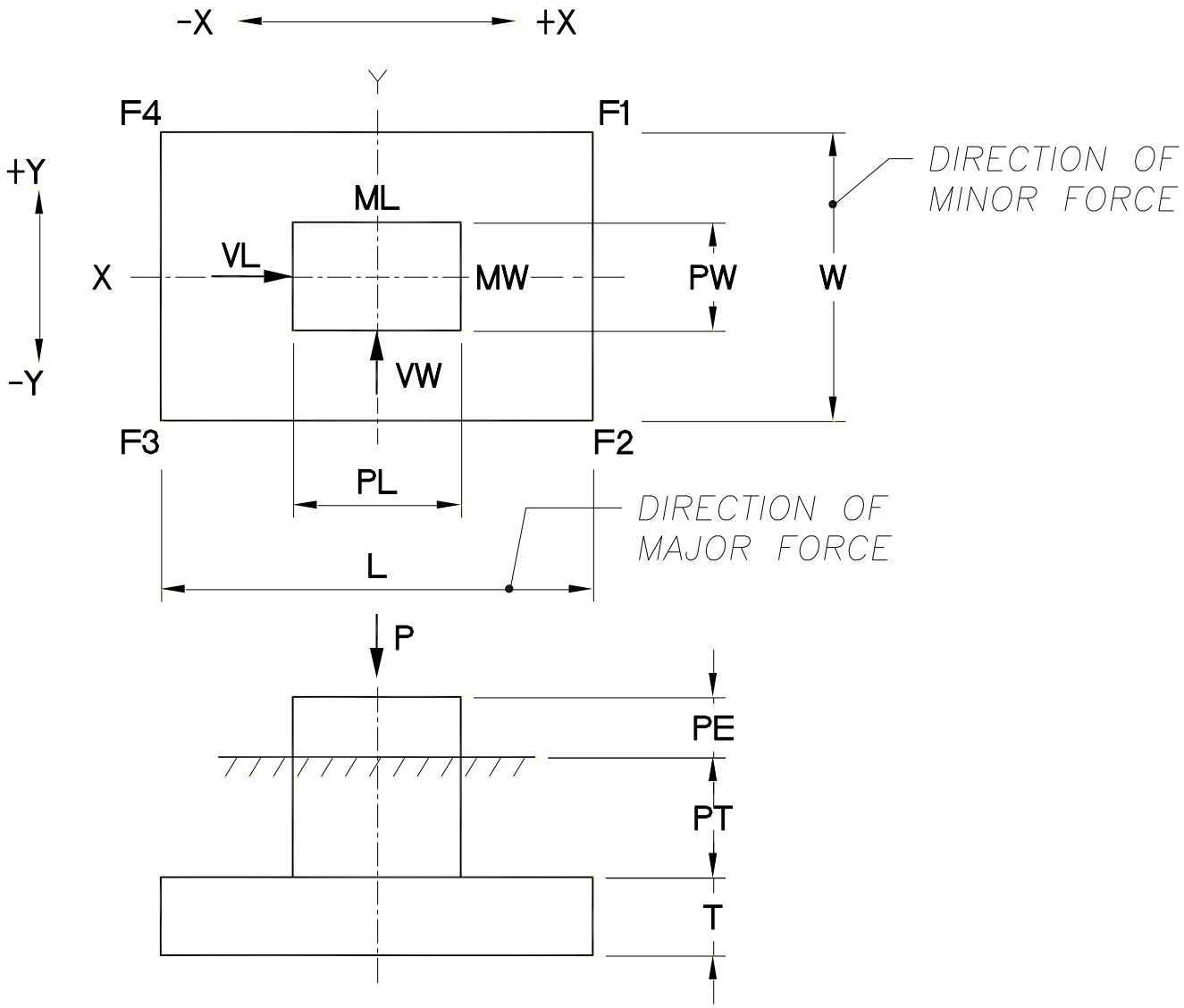

FOOTING SIZE

Wc = WEIGHT OF CONCRETE = 150 LBS / CUBIC FOOT ASSUMED

Ws = WEIGHT OF SOIL

INPUT VALUES ARE AT TOP OF PEDESTAL

SOUTH CAROLINA LICENSED PROFESSIONAL ENGINEER
No. 38665
DAVID A LALLONE

Sep 8 2023

Uncracked Section (No Tension)

$$F_i = \frac{P_t}{A} \pm \frac{Mx(y)}{Ix} \pm \frac{My(x)}{Iy}$$

P_s = weight of soil above pad
P_c = weight of concrete
P = weight of structure

Axial load at bottom of footing, $P_t = P + P_c + P_s$

Moments at bottom of footing

$Mx = Mw + Vw\ (T + PT + PE)$
$My = M_L + V_L\ (T + PT + PE)$

Footing corner stresses

$$F1 = \frac{P_t}{A} + \frac{Mx(y)}{Ix} + \frac{My(x)}{Iy}$$

$$F2 = \frac{P_t}{A} - \frac{Mx(y)}{Ix} + \frac{My(x)}{Iy}$$

$$F3 = \frac{P_t}{A} - \frac{Mx(y)}{Ix} - \frac{My(x)}{Iy}$$

$$F4 = \frac{P_t}{A} + \frac{Mx(y)}{Ix} - \frac{My(x)}{Iy}$$

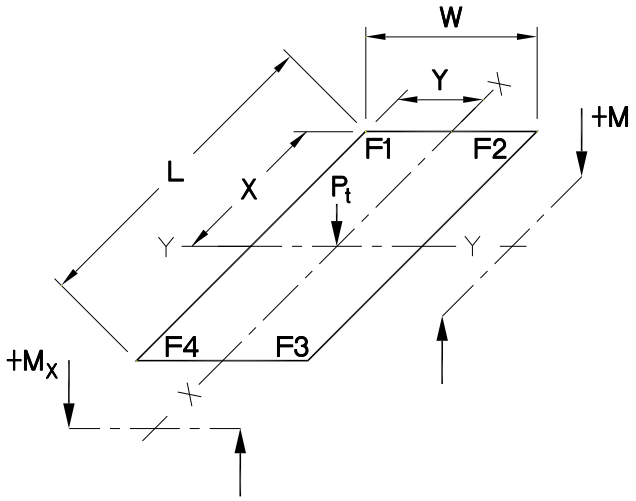

DESIGN MODEL AT BOTTOM OF FOOTING

Note: If F3 is negative (in tension), cracked section must be calculated

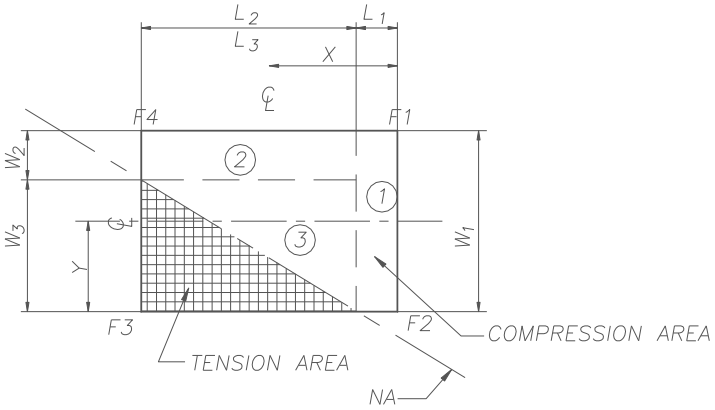

STRESS DIAGRAM - F3 NEGATIVE
Cracked Section - Case 1
Stresses are calculated at bottom of footing

General Flexure Formula

$$F_i = \frac{P_t}{A} \pm \left[\frac{Mxc - Myc\left(\frac{Ixcyc}{Iyc}\right)}{Ixc - \frac{(Ixcyc)^2}{Iyc}}\right]Y' \pm \left[\frac{Myc - Mxc\left(\frac{Ixcyc}{Ixc}\right)}{Iyc - \frac{(Ixcyc)^2}{Ixc}}\right]X'$$

SOUTH CAROLINA LICENSED PROFESSIONAL ENGINEER
No. 38665
DAVID A LALLONE

Sep 8 2023

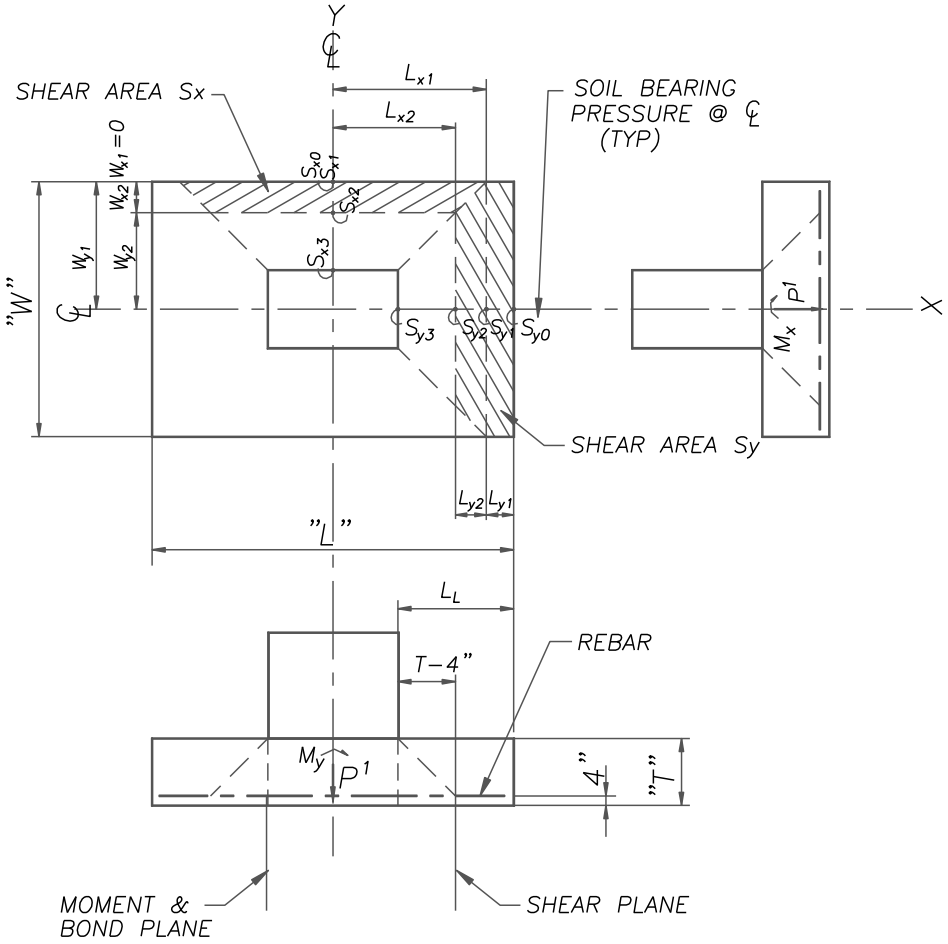

FOOTING MOMENT AND SHEAR MODEL

Uniform weight of concrete and soil, Pcs = (T) (Wc) + (PT) (Ws)

SOUTH CAROLINA LICENSED PROFESSIONAL ENGINEER
No. 38665
DAVID A LALLONE

Sep 8 2023

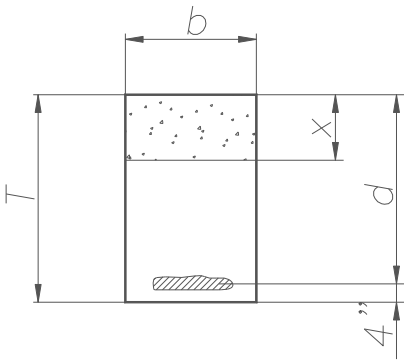

Use ASTM A615, Grade 60 rebar

Fy = 60 ksi f 'c = varies (psi)

Fs = 24 ksi $n = \frac{E}{57000\sqrt{f'c}}$

Increase allowable stresses 133%.

Trial:

Balance areas so that $x = \frac{3}{8}d$

Ms = Myy or Mxx

$Ast = \frac{12(Ms)}{(d - \frac{x}{3})(Fs)(1.33)}$ $ld_m = \frac{(0.05)(d_b)(Fy)}{\sqrt{f'c}}$

Check concrete stresses

Allowable stresses:

$f_{cr} = (0.4)(f'c)(1.33)$

$v_{cr} = (0.95\sqrt{f'c})(1.33)$

$p = \frac{Ast}{bd}$ $k = \sqrt{2np - (np)^2} - np$

$j = 1 - \frac{k}{3}$

Actual stresses:

$f_{ca} = \frac{12(Ms)}{(b)(k)(j)(d)^2(0.5)}$

$v_{ca} = \frac{Vs}{(b)(j)(d)}$

Vs = DTSy or DTSx

Check development length (Bond)

$ld_r = \frac{Mt}{(2)(Vs)} + la$ (la = 0)

Mt = (Ast) (Fy) (0.85) (d)

ld_a = LL - 3" or WW - 3"

Recheck As

$As_r = \frac{(12)(Ms)}{(j)(d)(Fs)(1.33)}$

Note: The area of steel does not include the steel located in the top of pad. That steel is shown to account temperature only.

SOUTH CAROLINA LICENSED PROFESSIONAL ENGINEER
No. 38665
DAVID A LALLONE

Sep 8 2023

DESIGN OF PEDESTAL WITH BI-AXIAL BENDING

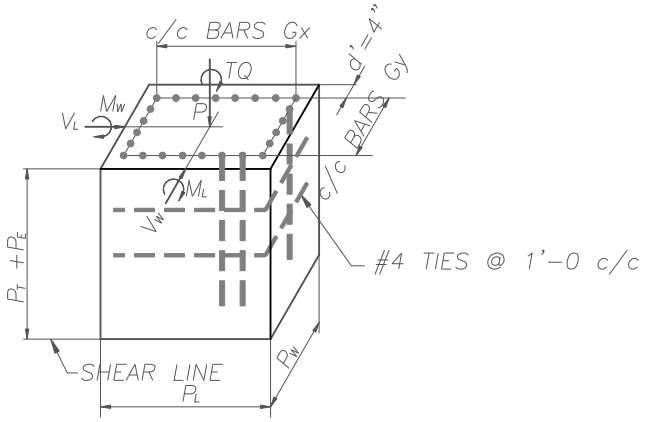

d' = 3"(cover) +
½ (#4 Tie) +
½ (½ of #8 bar) assumed +
4"

Minimum Reinforcement (1%)

Asm = (0.01) (PL) (PW) (144) in^2

DESIGN MODEL

Moments at base

My = M_L + V_L (PT + PE)
Mx = Mw + Vw (PT + PE)

Shear at base (acting on rebar only)

$V_1 = \sqrt{VL^2 + VW^2}$

$V_2 = \frac{TQ}{Gx} + \frac{TQ}{Gy}$

$V_t = V_1 + V_2$

Trial reinforcing (Assume #8 bar - 0.79 in^2)

$Qty = \frac{Asm}{0.79}$

Combined stress ratio

$CSR = \left(\frac{fv}{Fv}\right)^2 + \frac{fa}{Fa} + \frac{fbx}{Fbx} + \frac{fby}{Fby} \le 10$

Allowable stress (increase by 33%)

Fv = (0.33) (Fy) (1.33) = 26334 psi
Fa = (0.4) (f 'c) (1.33)
Fbx = Fby = (0.4) (f 'c) (1.33)

SOUTH CAROLINA
LICENSED PROFESSIONAL ENGINEER
No. 38665
DAVID A LALLONE

Sep 8 2023

Actual Stress

$$fv = \frac{Vt}{Ast} \qquad fa = \frac{P}{Ag} \qquad fbx = \frac{(Mx)(Cx)}{Ix} \qquad fby = \frac{(My)(Cy)}{Iy}$$

Ast = area of reinforcement used
Ag = gross area of pedestal

$$Cx = \frac{PL}{2} \qquad Cy = \frac{PW}{2}$$

$$Ix = \frac{(PW)(PL)^3}{12} + \frac{(2n)(Ast)(Gx)^2}{6}$$

$$Iy = \frac{(PL)(PW)^3}{12} + \frac{(2n)(Ast)(Gy)^2}{6}$$

Since the pedestal is almost in pure bending (P load is negligible), the following stress ratio must be used.

$$CSM = \frac{Mx}{Mo_x} + \frac{My}{Mo_y} \le 1.0$$

Mo_x = (0.40) (As) (Fy) (1.33) (PW - 2d')

Mo_y = (0.40) (As) (Fy) (1.33) (PL - 2d')

As = tension steel = $\frac{Ast}{4}$

Review CSR and CSM and adjust rebar size if required

SOUTH CAROLINA LICENSED PROFESSIONAL ENGINEER
No. 38665
DAVID A LALLONE

Sep 8 2023

NOTE: Loads in kips, dimensions in feet

$M_{TL} = (Tc)(H_1 + H_3)$ $M_{WL} = (Rh)(H_1 + H_3) + (Wv)(H_2 + H_3)$ $Mr = \sqrt{M_{WL}^2 + M_{TL}^2}$

$P_{WL} = Rh + Wv$

$$\text{Eff H} = \frac{M_{WL}}{P_{WL}}$$

Use Eff H to determine effective P_{TL}

$$P_{TL} = \frac{M_{TL}}{\text{Eff H}}$$

$$P = \sqrt{(P_{TL})^2 + (P_{WL})^2}$$

$$D = \frac{2.37\,P + \sqrt{5.617\,P^2 + 10.56\,(S_1\,b * P * H)}}{2\,S_1\,b}$$

$$\text{Wt of concrete, Wc} = \frac{b^2}{4} * \pi * (D + H_3) * 0.15$$

Effective OT Moment = Mr - (Wc + 0.5 DL)(C)

Determine Effective P based on Effective OT Moment

$$\text{Eff P} = 0.75\left(\frac{\text{Eff OT Mom}}{\text{Eff H}}\right)$$

Recalculate required depth D based on Eff P and Eff H

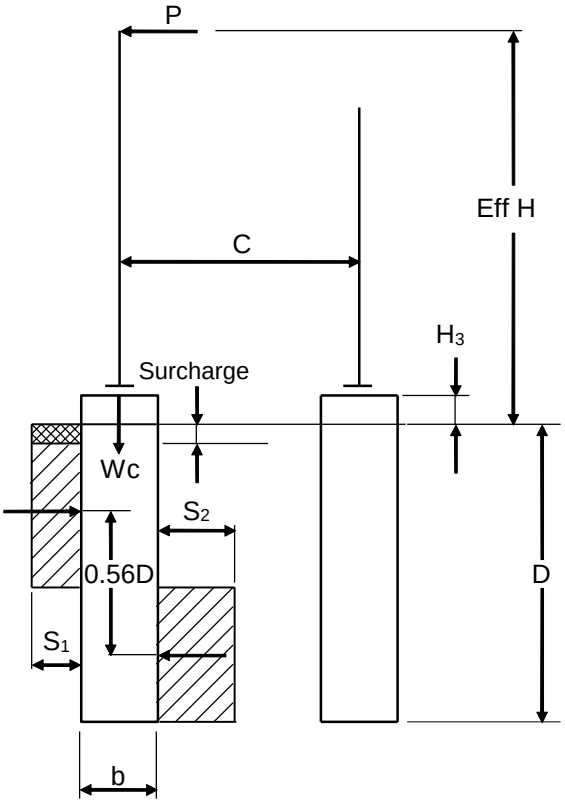

REINFORCING

MR = (Eff P) (Eff H)

Fy = Rebar yield (KSI)
Ab = Area of single bar (in^2)
As = Req'd area of reinforcement ($in.^2$)
D_1 = Diameter of rebar cage (in.)
J = 1.33 for Group II only

$$\text{As} = \frac{12\,(MR)}{0.12\,(Fy)\,(D_1)\,(J)} \geq 1\%\ \text{Cylinder Area}$$

$$\text{Number of bars req'd} = \frac{As}{Ab}$$

$$\text{Spacing} = \frac{\pi\,D_1}{\text{No of bars}}$$

The use of #4 hoops @ 1'-0 (±) c /c will be used for cylinder diameters 4 ft and less. #5 hoops for cylinders larger than 4 ft, unless otherwise specified on the printouts.

SOUTH CAROLINA LICENSED PROFESSIONAL ENGINEER
No. 38665
DAVID A LALLONE

Sep 8 2023

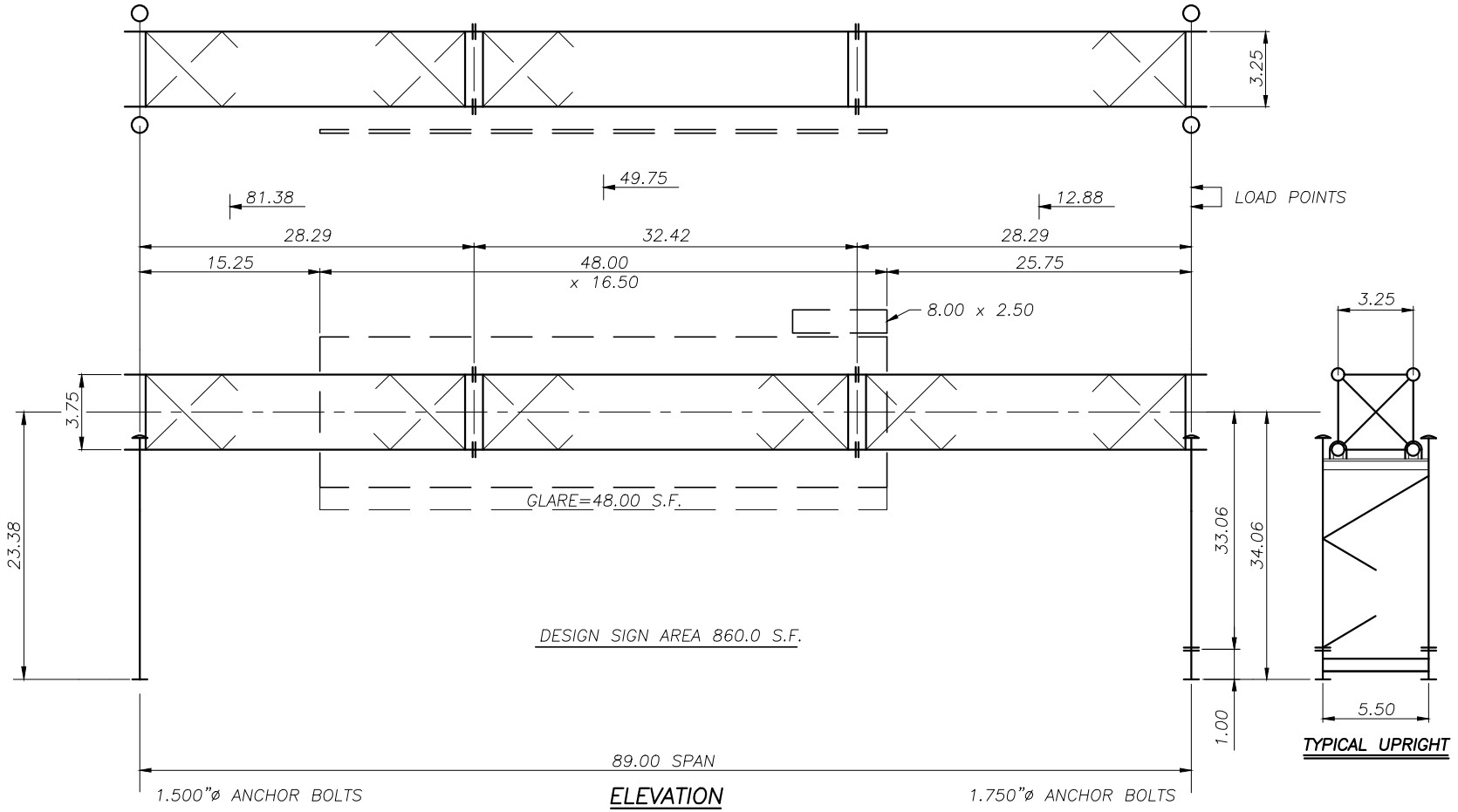

ELEVATION

STR NO: OH-12
STA NO: 414+73.64(EB)

TRUSS:	CHORDS	6.625 x 0.250
	VERT DIAGONALS	1.900 x 0.200
	HORIZ DIAGONALS	1.900 x 0.200
	STRUTS	1.660 x 0.140
	INT DIAGONALS	1.660 x 0.140

UPRIGHTS:	LEFT POSTS	12.750 x 0.250
	STRUTS & DIAGONALS	3.500 x 0.188
	RIGHT POSTS	14.000 x 0.250
	STRUTS & DIAGONALS	3.500 x 0.188

SOUTH CAROLINA
LICENSED PROFESSIONAL ENGINEER
No. 38665
DAVID A LALLONE

May 9 2025

Subject Box Truss Design Information Sheet BT7
Job No C3546 By MAH Date 3/31/25
GROUP 2 Chk'd By --- Date ---

3

Box Truss Double Pole Structure Design

Reference Walpar Job Number C3546
Reference Design Information Sheet Number BT7 Structure : OH-12 Station : 414+73.64(EB)
State SC
AASHTO Specification 6th Edition Fatigue Category : II
Design Wind Velocity (V) 100 mph

Structure Dimensions

Span (S)	89.00 ft	Truss Hgt (U)	3.75 ft	Truss Depth (Y)	3.25 ft
End Section Length	29.29 ft	Middle Section Length	32.42 ft	Coeff of Hgt (Kz)	1.05
Left Upright Hgt (H)	23.38 ft	Right Upright Hgt (H)	34.06 ft	Center to center of upright posts (Yu)	5.50 ft
		Right Upright Splice Dist:	1 ft		

Sign Information **Design Sign Area: 864.00 sq ft** Z Ecc to bottom of Glare Screen

Sign	Load (i)	Lgth (B_i)	Hgt (D_i)	Location (a_i)	Unit Wgt	Depth	C_d	Front/Back	Z Ecc	Area	Exit Panel
1	2	48.00	16.50	49.75	7.00		1.19	F	9.75	864.0	

Walkway Information

	Lgth	Location	Width	Unit wgt	Y Ecc
WW1	50.75	48.38	2.54	65	5.56

Load Summary Estimate for Field Use Only
(Distance from right end of assembled truss)

Weight of truss only	8666 lbs
Weight of erected signs & WW	6928 lbs
Center of erected sign & WW+truss load	47.56 ft
Front to Back Overturning on Truss	26545 ft-lbs
Max upright weight	3871 lbs
Max truss section weight	3171 lbs

SOUTH CAROLINA LICENSED PROFESSIONAL ENGINEER
David A Lallone
No. 38665
DAVID A LALLONE

May 9 2025

4

BT7 - 1 of 13

Walpar © 2014

Box Truss Double Pole Structure Design

Job No : C3546 Structure No : OH-12 Station : 414+73.64(EB)

Loads

Unit wind load on sign(s)/C_d: 30.64 psf Unit wind load on exposed truss: 36.77 psf Unit wgt of truss: 90.51 plf Unit ice wgt on truss: 30.61 plf

Truss Area for Wind Load (A_t): 1.60 sq ft / ft ***All loads in charts in lbs, ft or ft-lbs unless noted**

Truss Load Summary For Actual Sign & WW Condition

	Load (i)	Dead	Wind (W_p & W_h)	Ice
Sign and Truss Loads Ref: (BT7)	1	2331	1513	788
	2	10393	31586	4061
	3	1380	896	467
WW Loads	WW1	3299	1138	1354
Left Reaction (R_L)		9202	19313	3547
Right Reaction (R_R)		8201	15820	3124
Maximum Moments (M)		238449	536928	93167
Point of "0" shear (A_m)		45.97	46.68	46.07

** WW/EQ Loads are incorporated into Sign and Truss Loads to determine Reactions and Moments

Serviceability Requirements

Truss DL + IL Deflection	1.73 in
Limit for Deflection	7.12 in
Camber Used (Cu)	3.00 in
Permanent Camber (Cp)	1.75 in

SOUTH CAROLINA LICENSED PROFESSIONAL ENGINEER No. 38665 DAVID A LALLONE

May 9 2025

Post Loads

	Dead	Wind	Ice	Group II t_c	Group III t_c	Lateral Stiffness Ratio
Left Upright	2203	952	576	208	312	0.72
Right Upright	3871	1408	921	331	497	0.28

Walpar © 2014

Box Truss Double Pole Structure Design

Job No : C3546 Structure No : OH-12 Station : 414+73.64(EB)

Load Combinations for Design Sign Area

Truss Member Loads	DL	DL +WL	DL+1/2 WL+IL
Truss Chords (Pc)	40505	123109	97872
Vertical Diagonals (Pv)	10601	12771	15385
Horizontal Diagonals (Ph)	3746	20783	13345
Vertical Struts (Psv)	7383	6112	7684
Horizontal Struts (Psh)	2412	13378	8590
Truss Moments			
Truss Chords (XMc)	1310	6413	3901

Upright Member Loads	Upright Loads					Web Member Loads	
Left Upright	M_N	M_{tc}	V_N	V_{tc}	Axial	Diagonals	Struts
Group II Comb. 1 (DL+WL)	463055	84659	20266	3721	11405	32767	23170
Group III Comb. 1 (DL+1/2WL+IL)	231527	42329	10133	1861	15528	16383	11585
Group II Comb. 2 (DL+WL)	277833	126988	12159	5582	11405	20880	14764
Group III Comb. 2 (DL+1/2WL+IL)	138916	63494	6080	2791	15528	10440	7382
Right Upright							
Group II Comb. 1 (DL+WL)	588240	125484	17228	3845	12072	27881	19715
Group III Comb. 1 (DL+1/2WL+IL)	294120	62742	8614	1922	16116	13940	9857
Group II Comb. 2 (DL+WL)	352944	188226	10337	5767	12072	18194	12865
Group III Comb. 2 (DL+1/2WL+IL)	176472	94113	5168	2884	16116	9097	6432

Material Information

	Pipe Size (Min Yield)	Unbraced Length	CSR Group II	CSR Group III
Truss Chords	6.625 x 0.250 (52 ksi)	7.73 ft	0.92	0.69
Vertical Diagonals	1.900 x 0.200 (52 ksi)	5.38 ft	0.69	0.83
Vertical Struts	1.660 x 0.140 (52 ksi)	3.75 ft	0.37	0.46
Horizontal Diagonals	1.900 x 0.200 (52 ksi)	5.05 ft	0.99	0.64
Horizontal Struts	1.660 x 0.140 (52 ksi)	3.25 ft	0.71	0.46

	Pipe Size (Min Yield)	Unbraced Length	CSR (Comb. 1) Group II	CSR (Comb. 1) Group III	CSR (Comb. 2) Group II	CSR (Comb. 2) Group III
Left Upright Posts	12.750 x 0.250 (52 ksi)	21.22 ft	0.62	0.32	0.71	0.37
Left Upright Diagonals	3.500 x 0.188 (52 ksi)	5.95 ft	0.54	0.27	0.35	0.17
Left Upright Strut	3.500 x 0.188 (52 ksi)	4.44 ft	0.34	0.17	0.22	0.11
Right Upright Posts	*14.000 x 0.250 (52 ksi)	31.91 ft	0.72	0.37	0.84	0.44
Right Upright Diagonals	3.500 x 0.188 (52 ksi)	6.25 ft	0.47	0.24	0.31	0.15
Right Upright Strut	3.500 x 0.188 (52 ksi)	4.33 ft	0.29	0.15	0.19	0.09

* Post size is for stub only, original post size may vary



May 9 2025

4

BT7 - 3 of 13

Walpar © 2014

Box Truss Double Pole Structure Design

Job No : C3546 Structure No : OH-12 Station : 414+73.64(EB)

Structure Detail Information

Truss Chord Splices

Maximum Design Load at Splice	147407 lbs
Splice Moment (per inch of circum)	4427 in-lbs
Splice Bolt Circle	9.5 in.
Splice Bolt Qty & Size	6 - 1" ø A325
Splice Plate Thickness	1.0 in.
Splice Plate Weld	¼ fillet

Upright Detail

	Left	Right
Maximuim Anchor Bolt Pullout	42852 lbs	57702 lbs.
Anchor Bolt Spacing	13.5 in.	14 in.
Anchor Bolt Yield	55 ksi	55 ksi
Anchor Bolt Qty & Size (ea pole)	4 - 1.5" ø	4 - 1.75" ø
Anchor Bolt Length (Embed)	4.50 ft (3.5 ft)	4.50 ft (3.5 ft)
Anchor Bolt CSR	0.69	0.69
Base Plate Thickness	1.5 in.	1.75 in.
Base Plate Weld	5/16 fillet	5/16 fillet
Truss Seat	WT7x15	WT6x13
Truss Connection U-Bolts	5/8" ø	5/8" ø
Splice Moment (per inch of circum)		6894 in. lbs
Splice Bolt Circle		14 in.
Splice Bolt Qty & Size		4 - 1¾" ø A449
Splice Plate Thickness		1.75 in.
Splice Plate Weld		5/16 fillet

Sign Hanger Detail

Design hanger spacing 9.00 ft

Sign Hanger U-Bolt type ASTM-A307

SIGN	Max UBL at End	Max Spacing	Hanger U-Bolt	Sign Hanger	Hanger Support
1	5.48 ft	9.00 ft	2 - ½" ø	L5x3x5/16	W6x9

Structure Input (For Foundation Designs)

	Left	Right
Truss DL React (Rd)	11.98 k	10.47 k
Upr DL React (Rv)	2.20 k	3.87 k
Truss WL React (Rh)	18.89 k	15.58 k
Upr WL React (Wv)	0.95 k	1.41 k
Distance To Rh (H1)	23.38 ft	34.06 ft
Distance To Wv (H2)	12.63 ft	17.97 ft
Min Ped Lgth (PL)	7.75 ft	8.00 ft
Min Ped Wth (PW)	2.25 ft	2.50 ft



May 9 2025

4

BT7 - 4 of 13

Walpar © 2014

Box Truss Double Pole Structure Design

Job No : C3546 Structure No : OH-12 Station : 414+73.64(EB)

Vibration and Fatigue (Per AASHTO 6th Edition)

Natural Wind Gust Load on Sign(s)/C_d	4.42 psf	Truck Induced Gust Load on Truss	10.42 psf
Natural Wind Gust Load on Truss	5.30 psf	Extent of Truck Induced Gust	12.00 ft
		Truss Area for Truck Induced Gust	1.56 sq ft / ft
		Location of Center of Truck Induced Gust	44.50 ft

Truck Induced Gust Loading

ID	P_{TG} (Uplift)	P_{TG} Torque	Location
Truss Chords	195		44.50
SIGN 1 (PARTIAL)			44.50
Walkway	1265	1876	44.50
Left Reaction	730		
Right Reaction	730		
Maximum Moments	30310		

Truss Load Summary for Natural Wind

LOADS (i)	$P_{NWG(i)}$
1	218
2	4176
3	129
Left Reaction	2574 lbs
Right Reaction	2115 lbs
Maximum Moments	71363 ft-lbs

Load Combinations for Vibration and Fatigue

Truss Members	P_{NWG}	P_{TG}
Truss Chords	10979	4041
Vertical Diagonals		524
Horizontal Diagonals	999	
Vertical Struts		365
Horizontal Struts	643	
Upright Members		
Left Post	10938	365
Right Post	13096	365

Vibration and Fatigue Stresses

	NWG (ksi)	TIG (ksi)	Allowable (ksi)	
Truss Vertical Diagonals		0.49	1.20	
Truss Horizontal Diagonals	0.94		1.20	
Truss Vertical Struts		0.55	1.20	
Truss Horizontal Struts	0.96		1.20	
Truss chord at web members	0.67	0.81	4.50	
Upright Base Connection LT	1.11	0.04	2.60	Socket Connection Base Detail
Upright Base Connection RT	1.21	0.03	2.60	Socket Connection Base Detail
Anchor bolts - LT	1.94		7.00	
Anchor bolts - RT	1.72		7.00	

SOUTH CAROLINA LICENSED PROFESSIONAL ENGINEER
David A Lallone
No. 38665
DAVID A LALLONE

May 9 2025

4

BT7 - 5 of 13

Walpar © 2014

Box Truss Double Pole Structure Design

Job No : C3546 Structure No : OH-12 Station : 414+73.64(EB)

Left Foundation Design

Boring Type SPT Boring Designation G-112
Major Soil Type Cohesionless Depth to Water NA Surcharge (Frost) Depth 2 ft
Ground Slope 0:1 Consider slope stability? N

SOIL TYPES	
01-GP	07-SM
02-GW	08-ML
03-GM	09-MH
04-GC	10-SC
05-SP	11-CL
06-SW	12-CH

Soil Properties

Depth	N Value	γ' (pcf)	Φ (deg)	S_u (lbf/ft^2)	α	β	f_{SN} (lbf/ft^2)	$(N_1)_{60}$	Soil Type
**0 - 2	25	113	37			1.20	183	50	07
2 - 4	20	125	30	2500			228	40	11
4 - 6	32	137	32	4000	0.55		392	64	11
6 - 8	24	129	31	3000	0.55		390	48	11
8 - 10	40	120	37			1.10	411	56	07
10 - 17.6	12	106	32			0.80	637	14	07
17.6 - 35	12	106	30			0.74		10	07

* Soil Type 13 indicates rock layer with N>60 for cohesionless soil or N>40 for cohesive soils
**Top 2.0 ft of soil will not contribute to load resistance.

Soil Bearing Capacity for Left Spread Footing Design

Footing width, B 11.00 ft
Footing length, L 22.00 ft
Eccentricity, e_L 3.62 ft
Eccentricity, e_B 0.74 ft
Effective ftg width, B' 9.52 ft
Effective ftg width, L' 14.76 ft

Total wgt of load, foundation and soil, Pt 125.31 k
Normal moment, ML 453.65 ft-k
Transverse moment, Mw 92.78 ft-k
Distance from ground to bottom of footing, d_{min} 3.00 ft
Distance from ground to bottom of footing, D_f 3.00 ft
Distance to ground water from bottom of ftg, z_w N.A.
Overburden pressure at base of footing, q 0.36 ksf
Weighted average soil unit weight below pad, γ 120 pcf

Ultimate bearing capacity, q_{ult} 60.00 ksf
Allowable Bearing Capacity 20.75 ksf
Bearing Capacity used *** 2.00 ksf

***Note: Bearing capacities greater than 4.0 ksf will rarely effect spread footing pad size



May 9 2025

4

Walpar © 2014

Box Truss Double Pole Structure Design

Job No : C3546 Structure No : OH-12 Station : 414+73.64(EB)

Right Foundation Design

Boring Type SPT Boring Designation G-114
Major Soil Type Cohesionless Depth to Water NA Surcharge (Frost) Depth 2 ft
Ground Slope 6:1 Consider slope stability? N

SOIL TYPES	
01-GP	07-SM
02-GW	08-ML
03-GM	09-MH
04-GC	10-SC
05-SP	11-CL
06-SW	12-CH

Soil Properties

Depth	N Value	γ' (pcf)	Φ (deg)	S_u (lbf/ft^2)	α	β	f_{SN} (lbf/ft^2)	$(N_1)_{60}$	Soil Type
**0 - 2	10	105	33			0.87	271	20	07
2 - 4.5	8	104	32			0.67	459	16	07
4.5 - 6	9	105	32			0.71	2964	18	07
6 - 8	7	104	31			0.53	2648	12	07
8 - 10	6	103	30			0.44	1229	9	07
10 - 35	6	103	28			0.38	1314	6	07
							1677		

* Soil Type 13 indicates rock layer with N>60 for cohesionless soil or N>40 for cohesive soils
**Top 2.0 ft of soil will not contribute to load resistance.

Soil Bearing Capacity for Right Spread Footing Design

Footing width, B 11.00 ft
Footing length, L 21.00 ft
Eccentricity, e_L 3.76 ft
Eccentricity, e_B 0.78 ft
Effective ftg width, B' 9.44 ft
Effective ftg width, L' 13.48 ft

Total wgt of load, foundation and soil, Pt 147.95 k
Normal moment, ML 556.15 ft-k
Transverse moment, Mw 115.76 ft-k
Distance from ground to bottom of footing, d_{min} 3.58 ft
Distance from ground to bottom of footing, D_f 4.50 ft
Distance to ground water from bottom of ftg, z_w N.A.
Overburden pressure at base of footing, q 0.47 ksf
Weighted average soil unit weight below pad, γ 103 pcf

Ultimate bearing capacity, q_{ult} 24.63 ksf
Allowable Bearing Capacity 8.00 ksf
Bearing Capacity used *** 2.00 ksf

***Note: Bearing capacities greater than 4.0 ksf will rarely effect spread footing pad size



May 9 2025

4

BT7 - 7 of 13

Walpar © 2014

Box Truss Double Pole Structure Design

Job No : C3546 Structure No : OH-12 Station : 414+73.64(EB)

Left Upright Spread Footing Design

Material/Soil Specifications and Safety Factors

Concrete f'_c :	4100 psi	Concrete wgt :	150 pcf
Rebar yield f_y :	60000 psi	Rebar F_s :	24000 psi
Soil Bearing Capacity :	2000 psf	Soil unit wgt :	110 pcf

Load Safety Factor[1] : 1.15

Loads and Locations From Structure

Truss DL React (Rd)	11.98 k	Base to Truss Load Dim (H1)	23.38 ft
Upright DL React (Rv)	2.20 k	Base to Upright Load Dim (H2)	12.63 ft
Truss WL React (Rh)	18.89 k	Total DL React (DL)	14.19 k
Upright WL React (Wv)	0.95 k	Transverse Wind Component (tc)	3.97 k

Loads at Top of Pedestal from Structure

Axial load (P)	14.19 k		
Moment (ML)	453.65 ft-k	Moment (Mw)	92.78 ft-k
Shear (VL)	19.85 k	Shear (Vw)	3.97 k

Final Spread Footing Design Sizes

Pad Length (L)	22.00 ft	Pedestal Width (PW)	2.25 ft
Pad Width (W)	11.00 ft	Pedestal Length (PL)	7.75 ft
Pad Thickness (T)	1.50 ft	Pedestal Projection at Ctr (PE)	6.00 ft
		Ground line to top of pad (PT)	1.50 ft

Reinforcement

Pad	Pedestal
Top each way - #4 Bars @ 12" o.c.	4 ea. - #8 Vert. Bars @ 6.33" o.c. @ Ends
X Direction - 11 - #9 Bars @ 12.00" o.c.	12 ea. - #8 Vert. Bars @ 6.54" o.c. @ Sides
Y Direction - 22 - #5 Bars @ 12" o.c.	8 - #4 Ties @ 12" max. o.c.

Serviceability

14.36% of footing in uplift

Safety factor against overturning = 32.53

Quantities

2299 lbs of reinforcement

18.29 cyd of concrete

Uncracked Section Calculations

Wgt of soil above pad (Ps)	37.05 k		
Wgt of concrete (Pc)	74.07 k	Total Area (A)	242.00 ft²
Total Load (Pt)	125.31 k		
X	11.00 ft	Y	5.50 ft
Ix	2440.17 ft⁴	Iy	9760.67 ft⁴
Mx	147.77 k-ft	My	727.09 k-ft

Corner Stresses [Factored[1] (unfactored) loads]

F1	1.67 ksf (1.52 ksf)
F2	1.00 ksf (0.94 ksf)
F3	-0.63 ksf (-0.48 ksf)
F4	0.03 ksf (0.09 ksf)

Cracked Section Calculations [Factored loads[1] (unfactored loads)]

A1	116.04 ft² (146.08 ft²)	L1	10.55 ft (13.28 ft)	W1	11.00 ft (11.00 ft)
A2	29.07 ft² (26.41 ft²)	L2	11.45 ft (8.72 ft)	W2	2.54 ft (3.03 ft)
A3	48.44 ft² (34.75 ft²)	L3	11.45 ft (8.72 ft)	W3	8.46 ft (7.97 ft)
A'	193.56 ft² (207.25 ft²)				
Xc	1.80 ft (1.36 ft)	X1	5.73 ft (4.36 ft)	Y1	0.00 ft (0.00 ft)
Yc	0.67 ft (0.48 ft)	X2	-5.27 ft (-6.64 ft)	Y2	4.23 ft (3.99 ft)
		X3	-3.37 ft (-5.19 ft)	Y3	0.14 ft (-0.19 ft)
Ixc	1274.10 ft⁴ (1654.88 ft⁴)	X'	12.80 ft (12.36 ft)		
Iyc	6821.23 ft⁴ (7290.34 ft⁴)	Y'	6.17 ft (5.98 ft)		
Ixcyc	-1035.42 ft⁴ (-866.63 ft⁴)				
Mxc	63.74 ft-k (68.76 ft-k)				
Myc	501.82 ft-k (462.19 ft-k)				

Corner Stresses [Factored[1] (unfactored) loads]

F1	2.35 ksf (1.84 ksf)
F2	0.98 ksf (0.97 ksf)
F3	-1.06 ksf (-0.64 ksf)
F4	0.32 ksf (0.24 ksf)



May 9 2025

4

BT7 - 8 of 13

Walpar © 2014

Box Truss Double Pole Structure Design

Job No : C3546 Structure No : OH-12 Station : 414+73.64(EB)

Left Upright Spread Footing Design (cont.)

Moment and Shear Calculation Results

LL	7.13 ft	WW	4.38 ft	S_{y0}	1.67 ksf	S_{x0}	1.34 ksf
L_{x1}	8.25 ft	W_{x1}	0.00 ft	S_{y1}	1.41 ksf	S_{x1}	1.34 ksf
L_{x2}	5.04 ft	W_{x2}	3.21 ft	S_{y2}	1.11 ksf	S_{x2}	0.93 ksf
L_{y1}	2.75 ft	W_{y1}	5.50 ft	S_{y3}	1.01 ksf	S_{x3}	0.79 ksf
L_{y2}	3.21 ft	W_{y2}	2.29 ft	Pcs	0.39 ksf		
				DTS_y	12.34 k/ft	DTS_x	3.15 k/ft
				M_{YY}	26.80 ft-k	M_{XX}	7.31 ft-k

Reinforcement Calculations

f_{cr} : 2181.2 psi v_{cr} : 81 psi n : 7.95

b : 12.00 in d : 14.00 in x : 5.25 in

About Y Axis		About X Axis	
p :	0.0049	p :	0.0018
k :	0.2427	k :	0.1554
j :	0.9191	j :	0.9482
f_{ca} :	1226 psi	f_{ca} :	506 psi
v_{ca} :	80 psi	v_{ca} :	20 psi
Mt :	587281 in-k	Mt :	160143 in-k
ld_r :	23.80 in	ld_r :	25.40 in
ld_a :	82.50 in	ld_a :	49.50 in
ld_{min} :	52.71 in	ld_{min} :	29.28 in
A_{sr} :	0.78 in²	A_{sr} :	0.21 in²
A_s Used :	1.00 in²	A_s Used :	0.31 in²

Tie Size : #4

Pedestal Calculations

V_1 : 20238 lbs V_2 : 0 lbs V_t : 20238 lbs

About Y Axis		About X Axis	
C_x :	46.50 in	C_y :	13.50 in
G_x :	85.00 in	G_y :	19.00 in
f_a :	5.65 psi	f_v :	800.57 psi
F_a :	2181 psi	F_v :	26334 psi
f_{bx} :	29.81 psi	f_{by} :	552.32 psi
F_{bx} :	2181 psi	F_{by} :	2181 psi
M_x :	122545 ft-lb	M_y :	602487 ft-lb
M_{ox} :	319413 ft-lb	M_{oy} :	1428952 ft-lb
I_x :	2293558 in⁴	I_y :	176714 in⁴
A_g :	2511 in²	A_{sm} :	25.11 in²
A_{st} :	25.28 in²	A_s :	6.32 in²
QTY :	32	A_b :	0.79 in²
X Sp'g :	6.54 in	Y Sp'g :	6.33 in
C_{sx} :	25.34 in	C_{sy} :	8.60 in
N qty :	12	R qty :	4
CSR :	0.27	CSM :	0.81



Sliding friction μ : 0.40

Factor of safety against sliding : 2.02

May 9 2025

4

BT7 - 9 of 13

Walpar © 2014

Box Truss Double Pole Structure Design

Job No : C3546 Structure No : OH-12 Station : 414+73.64(EB)

Right Upright Spread Footing Design

Material/Soil Specifications and Safety Factors

Concrete f'_c :	3000 psi	Concrete wgt :	150 pcf
Rebar yield f_y :	60000 psi	Rebar F_s :	24000 psi
Soil Bearing Capacity :	2000 psf	Soil unit wgt :	110 pcf

Load Safety Factor[1] : 1.15

Loads and Locations From Structure

Truss DL React (Rd)	10.47 k	Base to Truss Load Dim (H1)	34.06 ft
Upright DL React (Rv)	3.87 k	Base to Upright Load Dim (H2)	17.97 ft
Truss WL React (Rh)	15.58 k	Total DL React (DL)	14.34 k
Upright WL React (Wv)	1.41 k	Transverse Wind Component (tc)	3.40 k

Loads at Top of Pedestal from Structure

Axial load (P)	14.34 k		
Moment (ML)	556.15 ft-k	Moment (Mw)	115.76 ft-k
Shear (VL)	16.99 k	Shear (Vw)	3.40 k

Final Spread Footing Design Sizes

Pad Length (L)	21.00 ft	Pedestal Width (PW)	2.50 ft
Pad Width (W)	11.00 ft	Pedestal Length (PL)	8.00 ft
Pad Thickness (T)	1.50 ft	Pedestal Projection at Ctr (PE)	1.00 ft
		Ground line to top of pad (PT)	3.00 ft

Reinforcement

Pad	Pedestal
Top each way - #4 Bars @ 12" o.c.	5 ea. - #8 Vert. Bars @ 5.50" o.c. @ Ends
X Direction - 11 - #8 Bars @ 12.00" o.c.	15 ea. - #8 Vert. Bars @ 5.50" o.c. @ Sides
Y Direction - 21 - #4 Bars @ 12" o.c.	5 - #4 Ties @ 12" max. o.c.

Serviceability	Quantities
10.90% of footing in uplift	1791 lbs of reinforcement
Safety factor against overturning = 12.37	15.80 cyd of concrete

Uncracked Section Calculations

Wgt of soil above pad (Ps)	63.98 k		
Wgt of concrete (Pc)	69.63 k	Total Area (A)	231.00 ft²
Total Load (Pt)	147.95 k		
X	10.50 ft	Y	5.50 ft
Ix	2329.25 ft⁴	Iy	8489.25 ft⁴
Mx	154.62 k-ft	My	747.05 k-ft

Corner Stresses [Factored[1] (unfactored) loads]	
F1	1.93 ksf (1.76 ksf)
F2	1.20 ksf (1.13 ksf)
F3	-0.65 ksf (-0.48 ksf)
F4	0.08 ksf (0.15 ksf)

Cracked Section Calculations [Factored loads[1] (unfactored loads)]

A1	134.88 ft² (156.93 ft²)	L1	12.26 ft (14.27 ft)	W1	11.00 ft (11.00 ft)
A2	23.45 ft² (23.87 ft²)	L2	8.74 ft (6.73 ft)	W2	2.68 ft (3.54 ft)
A3	36.34 ft² (25.10 ft²)	L3	8.74 ft (6.73 ft)	W3	8.32 ft (7.46 ft)
A'	194.66 ft² (205.90 ft²)				
Xc	1.42 ft (1.01 ft)	X1	4.37 ft (3.37 ft)	Y1	0.00 ft (0.00 ft)
Yc	0.51 ft (0.37 ft)	X2	-6.13 ft (-7.13 ft)	Y2	4.16 ft (3.73 ft)
		X3	-4.67 ft (-6.01 ft)	Y3	0.04 ft (-0.53 ft)
Ixc	1528.79 ft⁴ (1815.08 ft⁴)	X'	11.92 ft (11.51 ft)		
Iyc	6192.84 ft⁴ (6687.58 ft⁴)	Y'	6.01 ft (5.87 ft)		
Ixcyc	-819.05 ft⁴ (-665.87 ft⁴)				
Mxc	79.29 ft-k (80.08 ft-k)				
Myc	537.51 ft-k (500.72 ft-k)				

Corner Stresses [Factored[1] (unfactored) loads]	
F1	2.40 ksf (1.99 ksf)
F2	1.24 ksf (1.17 ksf)
F3	-0.88 ksf (-0.55 ksf)
F4	0.28 ksf (0.26 ksf)



May 9 2025

4

BT7 - 10 of 13

Walpar © 2014

Box Truss Double Pole Structure Design

Job No : C3546 Structure No : OH-12 Station : 414+73.64(EB)

Right Upright Spread Footing Design (cont.)

Moment and Shear Calculation Results

LL	6.50 ft	WW	4.25 ft	S_{y0}	1.82 ksf	S_{x0}	1.34 ksf
L_{x1}	8.25 ft	W_{x1}	0.00 ft	S_{y1}	1.59 ksf	S_{x1}	1.34 ksf
L_{x2}	5.17 ft	W_{x2}	3.08 ft	S_{y2}	1.28 ksf	S_{x2}	1.02 ksf
L_{y1}	2.25 ft	W_{y1}	5.50 ft	S_{y3}	1.16 ksf	S_{x3}	0.89 ksf
L_{y2}	3.08 ft	W_{y2}	2.42 ft	Pcs	0.56 ksf		
			0.00 ft	DTS_y	10.34 k/ft	DTS_x	2.50 k/ft
			0.00 ft	M_{YY}	22.08 ft-k	M_{XX}	5.76 ft-k

Reinforcement Calculations

f_{cr} : 1596 psi v_{cr} : 69 psi n : 9.29

b : 12.00 in d : 14.00 in x : 5.25 in

About Y Axis		About X Axis	
p :	0.0040	p :	0.0018
k :	0.2388	k :	0.1669
j :	0.9204	j :	0.9444
f_{ca} :	1025 psi	f_{ca} :	373 psi
v_{ca} :	67 psi	v_{ca} :	16 psi
Mt :	483724 in-k	Mt :	126120 in-k
ld_r :	23.39 in	ld_r :	25.24 in
ld_a :	75.00 in	ld_a :	48.00 in
ld_{min} :	54.77 in	ld_{min} :	27.39 in
A_{sr} :	0.64 in²	A_{sr} :	0.16 in²
A_s Used :	0.79 in²	A_s Used :	0.20 in²

Tie Size : #4

Pedestal Calculations

V_1 : 17329 lbs V_2 : 0 lbs V_t : 17329 lbs

About Y Axis		About X Axis	
C_x :	48.00 in	C_y :	15.00 in
G_x :	88.00 in	G_y :	22.00 in
f_a :	4.98 psi	f_v :	548.39 psi
F_a :	1596 psi	F_v :	26334 psi
f_{bx} :	25.09 psi	f_{by} :	426.58 psi
F_{bx} :	1596 psi	F_{by} :	1596 psi
M_x :	129355 ft-lb	M_y :	624122 ft-lb
M_{ox} :	462308 ft-lb	M_{oy} :	1849232 ft-lb
I_x :	2969534 in⁴	I_y :	263356 in⁴
A_g :	2880 in²	A_{sm} :	28.80 in²
A_{st} :	31.60 in²	A_s :	7.90 in²
QTY :	40	A_b :	0.79 in²
X Sp'g :	5.50 in	Y Sp'g :	5.50 in
C_{sx} :	26.40 in	C_{sy} :	9.78 in
N qty :	15	R qty :	5
CSR :	0.29	CSM :	0.62



Sliding friction μ : 0.40

Factor of safety against sliding : 2.79

May 9 2025

4

BT7 - 11 of 13

Walpar © 2014

Box Truss Double Pole Structure Design

Job No : C3546 Structure No : OH-12 Station : 414+73.64(EB)

Left Upright Cylindrical Footing Design

Concrete f '$_c$:	3000 psi	Concrete wgt :	150 pcf
Rebar yield f_y :	60000 psi	Min factor of safety for uplift :	1.00
Reinforcement Clear. :	4 in	Min factor of safety for lateral load :	2.86

Loads and Locations From Structure

Truss DL React (Rd)	11.98 k	Base to Truss Load Dim (H1)	23.38 ft
Upright DL React (Rv)	2.20 k	Base to Upright Load Dim (H2)	12.63 ft
Truss WL React (Rh)	18.89 k	Footing Projection at Ctr (H3)	6.00 ft
Upright WL React (Wv)	0.95 k	C/C of Cylinders (C)	5.50 ft

Normal Overturning Moment (M_{WL})	572.72 ft-k	Effective Hgt (H_{eff})	28.86 ft
Transverse Moment (M_{TL})	114.54 ft-k	Lateral Load (P_{eff})	9.02 k
Resultant Moment (M_R)	584.06 ft-k	Axial Force	10.64 k
Effective Overturning Moment	346.93 ft-k		

Final Cylindrical Footing Design Sizes

Req'd area of steel (A_s)	15.76 in²	Rebar Cage Dia (D1)	31.75 in
1% Cyl Area Min (A_m)	13.85 in²	Vertical bar spacing	7.67 in
Actual Reinf Area (A_p)	16.51 in²		

USE 42 in DIA x 24'- 11 CYLINDER
w/ 13- # 10 VERT. BARS & 25 - #4 HOOPS

Serviceability	Quantities
Calculated lateral safety factor = 17.5	3058 lbs of reinforcement
Calculated uplift safety factor = 3.9	17.79 cyd of concrete

Side Shear Results
(from Beta Method)

Cylinder Embedment	18.96 ft
Axial load	7.09 k
Uplift load	63.08 k
Weight of shaft	36.02 k
Side Resistance Capacity	245.49 k

Lateral Load Calculation Results
(from Brom's Method)

Soil friction angle Φ	32.7°
Soil unit weight γ	119 pcf
Average $(N_1)_{60}$ over eff depth (BPF)	26
Effective lateral load on cylinder	9.02 k
Effective moment on cylinder	260.20 ft-k
Axial thrust from moment and vertical loads	73.72 k
Rankine Passive Pressure Coeff. K_P	6.86
Ultimate soil resistance P_{ult}	391.29 k
Allowable soil resistance P_{max}	181.96 k
Ultimate soil moment capacity M_{ult}	6990 ft-k
Allowable soil moment capacity M_{max}	3251 ft-k
Ground line moment	314 ft-k
Dist. from GL to 0 shear point in cyl.	3.45 ft
Maximum moment in shaft	399 ft-k



May 9 2025

4

BT7 - 12 of 13

Walpar © 2014

Box Truss Double Pole Structure Design

Job No : C3546 Structure No : OH-12 Station : 414+73.64(EB)

Right Upright Cylindrical Footing Design

Concrete f'_c :	3000 psi	Concrete wgt :	150 pcf
Rebar yield f_y :	60000 psi	Min factor of safety for uplift :	1.00
Reinforcement Clear. :	4 in	Min factor of safety for lateral load :	2.86

Loads and Locations From Structure

Truss DL React (Rd)	10.47 k	Base to Truss Load Dim (H1)	34.06 ft
Upright DL React (Rv)	3.87 k	Base to Upright Load Dim (H2)	17.97 ft
Truss WL React (Rh)	15.58 k	Footing Projection at Ctr (H3)	1.00 ft
Upright WL React (Wv)	1.41 k	C/C of Cylinders (C)	5.50 ft

Normal Overturning Moment (M_{WL})	573.14 ft-k	Effective Hgt (H_{eff})	33.73 ft
Transverse Moment (M_{TL})	114.63 ft-k	Lateral Load (P_{eff})	8.06 k
Resultant Moment (M_R)	584.49 ft-k	Axial Force	10.76 k
Effective Overturning Moment	362.49 ft-k		

Final Cylindrical Footing Design Sizes

Req'd area of steel (A_s)	12.70 in²	Rebar Cage Dia (D1)	31.88 in
1% Cyl Area Min (A_m)	13.85 in²	Vertical bar spacing	7.15 in
Actual Reinf Area (A_p)	14.00 in²		

USE 42 in DIA x 23'- 0 CYLINDER
w/ 14- # 9 VERT. BARS & 24 - #4 HOOPS

Serviceability	Quantities
Calculated lateral safety factor = 12.1	2451 lbs of reinforcement
Calculated uplift safety factor = 1.7	16.39 cyd of concrete

Side Shear Results
(from Beta Method)

Cylinder Embedment	22.00 ft
Axial load	7.17 k
Uplift load	65.91 k
Weight of shaft	33.19 k
Side Resistance Capacity	114.43 k

Lateral Load Calculation Results
(from Brom's Method)

Soil friction angle Φ	31.0°
Soil unit weight γ	104 pcf
Average $(N_1)_{60}$ over eff. depth (BPF)	11
Effective lateral load on cylinder	8.06 k
Effective moment on cylinder	271.86 ft-k
Axial thrust from moment and vertical loads	76.67 k
Rankine Passive Pressure Coeff. K_P	2.69
Ultimate soil resistance P_{ult}	226.33 k
Allowable soil resistance P_{max}	105.25 k
Ultimate soil moment capacity M_{ult}	3911 ft-k
Allowable soil moment capacity M_{max}	1819 ft-k
Ground line moment	280 ft-k
Dist. from GL to 0 shear point in cyl.	4.34 ft
Maximum moment in shaft	323 ft-k

SOUTH CAROLINA
LICENSED PROFESSIONAL ENGINEER
David A Lallone
No. 38665
DAVID A LALLONE

May 9 2025

4

BT7 - 13 of 13

Walpar © 2014